SHENCHEN

Shenchen Pump

We aim to build the world brand of Peristaltic Pump

The first 'Peristaltic Pump Engineering Technology Research Center'

Peristaltic Pump • Syringe Pump

Shenchen Precision Pump Co.,Ltd (2016.1)

Peristaltic Pump Engineering Technology Research Center

HROMalytic +61(0)3 9762 2034 Australian Distributors

2 SHENCHEN . . . in Australia

1. Cosmetic Production Line
2. Industrial Field
3. Filling Production Line
4. Laboratory Application
5. Analytical Instrument Supporting
6. Filling Production Line

CHROMalytic +61(0)3 9762 2034
TECHnology Pty Ltd
Australian Distributors
Importers & Manufacurers
www.chromtech.net.au
nternational service.
Website NEW : www.chromalytic.net.au E-mail : info@chromtech.net.au Tel: 03 9762 2034 . . . in AUSTRALIA

Catalog

1 Company
2 Honor
3 Application
4 Products

PageNO X +/-3p ?

- Syringe Pump 1
- Compact Peristaltic Pump 3
- Flow Rates Peristaltic Pump 5
  - Lab2015 5
  - LabV Series/V Series 8
  - V6 Series (servo motor) 9
  - External control function 11
  - TC50 12
- Dispensing Peristaltic Pump 13
  - LabF Series/F Series 13
  - F6Series (servo motor) 15
  - IF3 Low Pulse (servo motor) 17
- Filling system 18
  - Split Type CF600/CF600 Plus 18
  - Integrated Type DF600/DF600 Plus 19
  - Split Type CF350 (servo motor) 22
  - Split Type DF600Ⅳ/DF350 (servo motor) 23
- Standard Peristaltic Pump 27
  - LabN Series 27
  - N Series 29
  - N6 Series (servo motor) 30
- Basic Peristaltic Pump 32
  - LabM Series 32
  - M Series 34
- Explosion Proof Peristaltic Pump 35
  - EXP600 35
  - QD600 36
- Medical Dialysis Pump–UC15 37
- Compact Pump Head–MiniPump Series 38
- Multichannel Pump Head 40
  - MC Series 40
  - MD Series 42
  - DG Series 43
  - MT12 44
- Easy Load Pump Head–YZ Series 45
- Fast Load Pump Head–DZ Series 47
- Low Pulse Pump Head–DY Series 48
- Standard Pump Head–SN Series 49

5 OEM Products 49
6 Peristaltic Pump Tubing and Accessory 57

CHROMalytic +61(0)3 9762 2034
TECHnology Pty Ltd
Australian Distributors
Importers & Manufacurers
www.chromtech.net.au
Website NEW : www.chromalytic.net.au E-mail : info@chromtech.net.au Tel: 03 9762 2034 . . . in AUSTRALIA

Syringe Pump

SPLab10

Model Number

- SPLab01 (1channel)
- SPLab02 (2channels)
- SPLab04 (4channels)
- SPLab06 (6channels)
- SPLab08 (8channels)
- SPLab10 (10channels)
- SPLab12 (12channels)

SPLab10–10 channel

Features

- Chromatic LCD display: Friendly human-computer interface; Large-screen LCD displays each technical parameter In real time.
- Syringe selection: It can be selected in the manufacturer table or input the inner diameter of the syringe barrel directly.
- Two measurement ways for option:
  Infusion flow volume -- Infusion speed rate
  Infusion flow volume -- Infusion time
- Display the infusion flow volume in real time, and it has calibration function.
- Users can check and change the parameters during infusing, it comes with power-down memory function.
- Working mode: 6 working modes--Infusion, withdrawal, Infusion/withdrawal, withdrawal/infusion, continuous, additional mode (Infusion/withdrawal, then exclude bubble). The parameter of each working mode saved separately.
- Protection function: The pump will stall and give an alarm when the drive structure of the pump is blocked.
- External control interface: Switch signal control start/stop.

Commonly used syringe reference flow injector

Syringe	Inside diameter(mm)	Flow rates(μ L/min-mL/min)	
		SPLab01/SPLab02	SPLab03-SPLab10
50 μ L	1.03	0.004~0.110	0.004~0.110
1mL	4.61	0.083~2.203	0.083~2.203
2.5 mL	7.28	0.208~5.492	0.208~5.492
5 mL	10.30	0.417~10.993	0.417~10.993
10 mL	14.57	0.834~21.997	0.834~21.997
25 mL	23.03	2.083~54.958	——
50 mL	32.57	4.166~109.921	——
60 mL	32.57	4.166~108.310	——

Installation Sizes Drawing

(Unit: mm)

Channel number	L
4	145
6	190
8	235
10	280
12	325

SPLab04

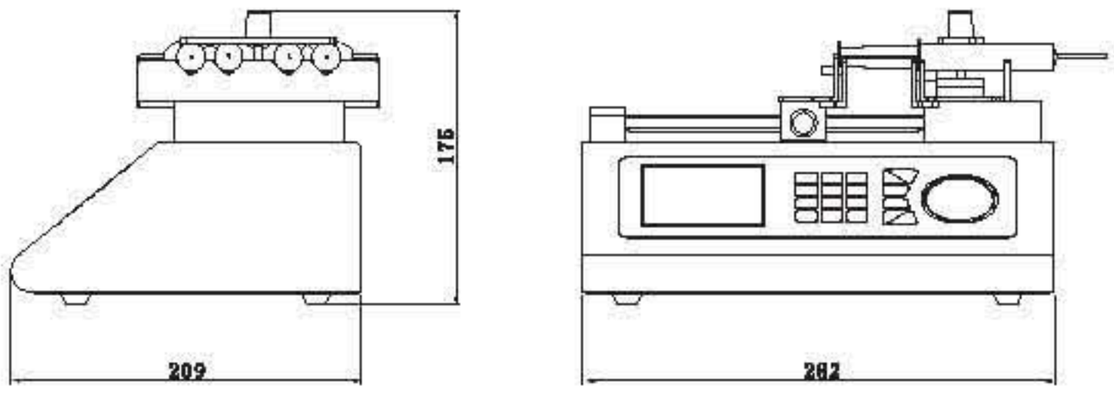

SPLab10

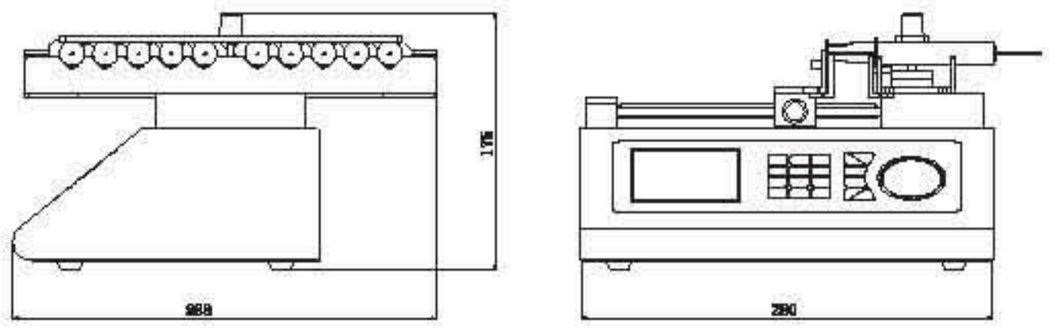

CHROMalytic +61(0)3 9762 2034
TECHnology Pty Ltd
Australian Distributors
Importers & Manufacurers
www.chromtech.net.au
Website NEW : www.chromalytic.net.au E-mail : info@chromtech.net.au Tel: 03 9762 2034 . . . in AUSTRALIA

Syringe Pump

SPLab02

SPLab02–Dual channel

SPLab01–Single channel

Product Introduction

Dual channel syringe pump with infusion/withdrawal mode, stainless steel body, and large-screen chromatic LCD is easy to operate. It can install and fix different types of injectors or syringes in the same time, and is suitable for transferring micro flow rates with high precision (non-medical).

Syringe Pump External Control Schematic

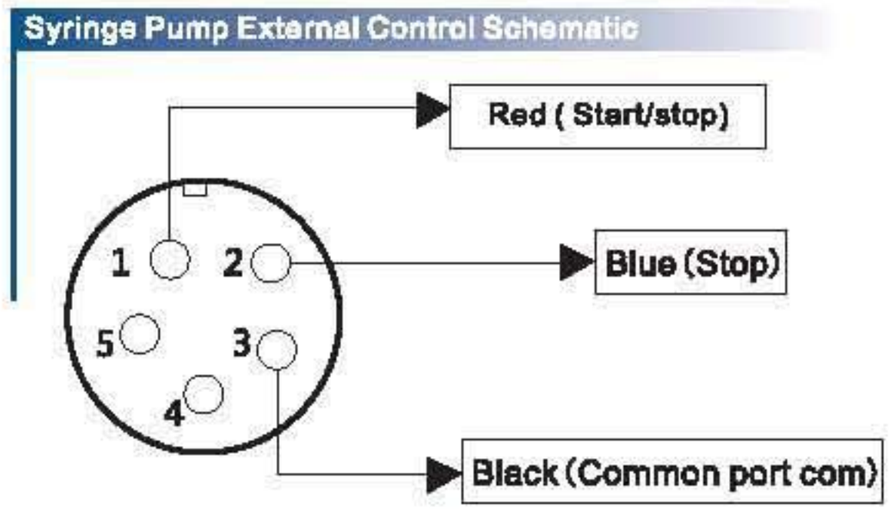

Technical Specifications

Channel number	Working mode	Syringe size	Infusion volume per microstep	Flow rates	Accuracy
1-2	Infusion/withdraw	10μL–140mL	0.078μl	0.001μL/min–127mL/min	≤ ±0.5%
3-12		10μL–10mL		0.001μL/min–21.997mL/min	
Max.linear force	**Advance per microstep**	**Min. step rate**	**Max. step rate**	**Min. linear rate**	**Max. linear rate**
10kgf	0.078μm	0.0351ms/Mirco step	0.937sec/Mirco step	5μm/min	132mm/min
Operating mode	**Display mode**	**Power supply**	**Operating condition**	**Weight**	
Rotary encoded switch and membrane keypad	320*240TFT-LCD	AC220V±10%(standard) AC110V±10%(optional)	Temperature 0–40℃ Relative humidity <80%	SPLab01: 4.84 Kg SPLab04: 5.73 Kg	SPLab02: 5.6 Kg SPLab10: 6.03 Kg

Installation Sizes Drawing (Unit: mm)

SPLab01

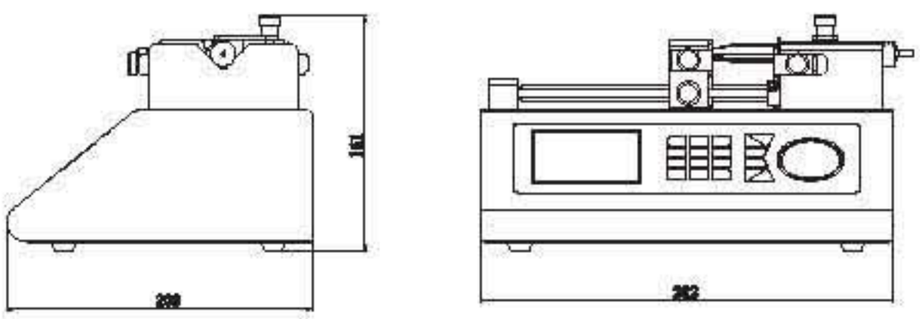

SPLab02

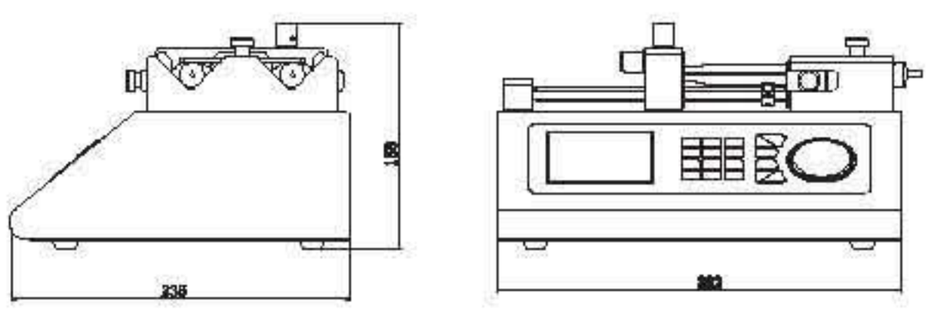

CHROMalytic +61(0)3 9762 2034
ECHnology Pty Ltd
Australian Distributors
Importers & Manufacurers
www.chromtech.net.au
Website NEW : www.chromalytic.net.au E-mail : info@chromtech.net.au Tel: 03 9762 2034 . . . in AUSTRALIA

Compact Peristaltic Pump

EM-MiniPump

Product Introduction

MiniPump series peristaltic pump use 42 stepper motor drive, small size,low noise. Embedded design,compact structure, fine appearance. OLED screen display the motor speed,direction and working status. The pump with external control interface can achieve external control,also can be controlled by computer.

Features

- Embedded design, small space, standard Industrial housing, more easy installation.
- OLED screen display.
- RS485 with MODBUS protocol, connect with PLC and HMI more easily and directly.
- Analog signal input interface, connect with inverter easily. EM-MiniPump external control use standard terminals, more suitable for industrial equipment.
- Low consumption, low noise.

Embedded design
-Dual channel
EM-MiniPump02

EM-MiniPump Series
Installation of the unique way

Embedded design
-Single channel
EM-MiniPump01
(Install sample)

4 kinds of connect tubing way

EM-MiniPump External control schematic diagram

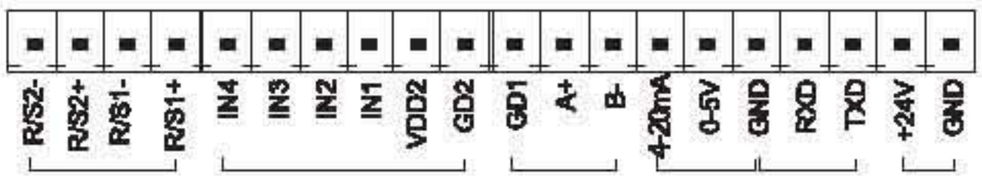

Installation Sizes Drawing (Unit: mm)

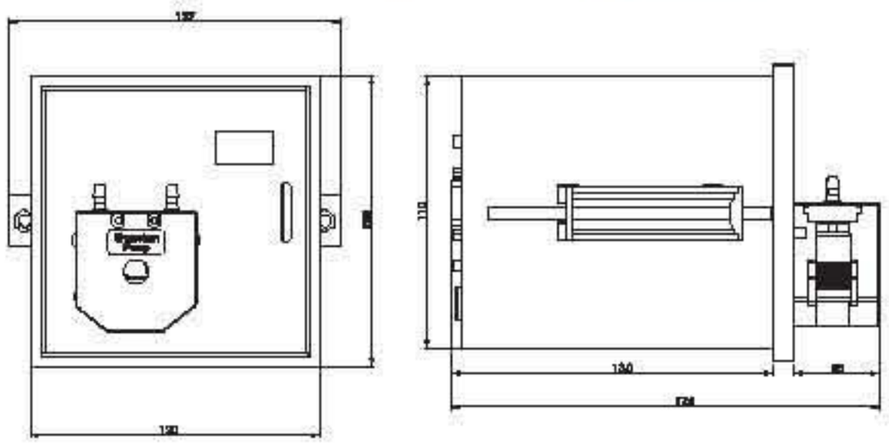

Technical Specifications

Flow rate range	0.0024~190 mL/min
Speed range	0.1~300 rpm, reversible.
Speed resolution	0.1rpm
Control method	Membrane keypad
Motor type	Stepper motor
Display	OLED display
External control	Start/stop,direction control (switch signal)
	0-5V, 0-10V, 4-20mA for option(Analog signal)
Communication interface	RS485 support MODBUS protocol(RTU mode)
Power supply	24V DC power
Drive dimension	110 x 120 x 220mm (L×W×H)
Weight	0.8 kg
Power consumption	< 15 W
Condition temperature	0–40℃
Relative humidity	< 80%
IP rate	IP31

Drive	Motor type	Suitable pump head	Tubing size	Rotation speed	Flow rates range
EM-MiniPump	Stepper motor	MiniPump01 (4 rollers single channel)	1.6mm Wall thickness tubing: 13#、14#、16#、25#	0.1–300 (rpm)	0.0024–190.00(mL/min)
			1mm Wall thickness tubing:Tubing ID 1mm、2mm、2.5mm、3mm		
		MiniPump02 (4 rollers dual channel)	1mm Wall thickness tubing:Tubing ID 1mm、2mm、2.5mm、3mm		0.005–108.39(mL/min)

CHROMalytic +61(0)3 9762 2034
TECHnology Pty Ltd
Australian Distributors
Importers & Manufacurers
www.chromtech.net.au
Website NEW : www.chromalytic.net.au E-mail : info@chromtech.net.au Tel: 03 9762 2034 . . . in AUSTRALIA

7 SHENCHEN . . . in Australia

Compact Peristaltic Pump

SP-MiniPump

Product Introduction

SP-MiniPump series peristaltic pump, 304 stainless steel housing, stepper motor drive. OLED screen, display the current motor speed, direction and working status. Digital knob and toggle switch control speed and direction separately. External control with standard terminal, multiple external interface, support RS485 (MODBUS protocol, RTU mode).

Features

- 304 stainless steel housing, resisting corrosion, small space.
- Digital knob control speed, toggle switch control direction and start/stop.
- RS485 standard MODBUS protocol, more convenient to connect with PLC.
- Standard connection terminals, various external control function, more suitable for equipment.

SP-MiniPump External Control Schematic

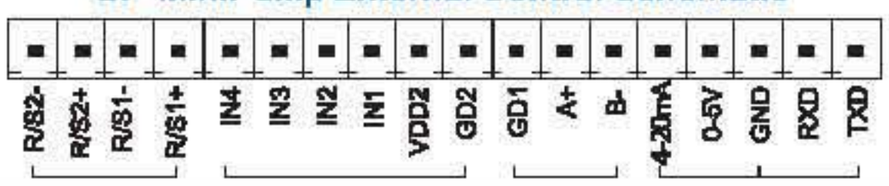

Installation Sizes Drawing (Unit: mm)

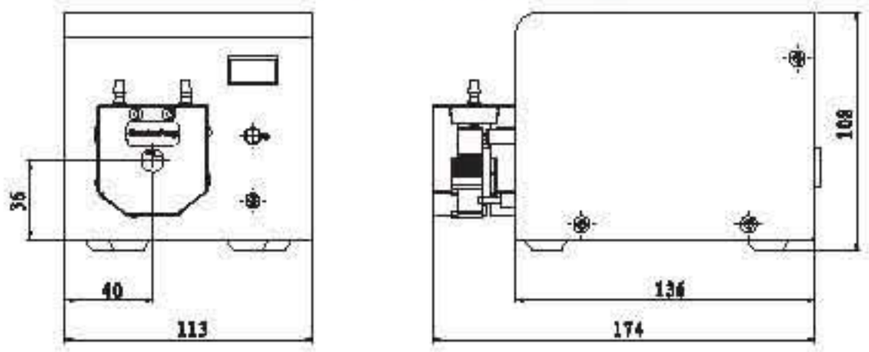

Technical Specifications

Flow rate range	0.0024~190 mL/min
Speed range	0.1~300 rpm, reversible.
Speed resolution	0.1rpm
Speed control	Digital knob control speed
Motor type	Stepper motor
Display	OLED display
External control	Start/stop,direction control (switch signal)
	Speed control 0-5V, 0-10V, 4-20mA for option(Analog signal)
Communication interface	RS485 support MODBUS protocol (RTU mode)
Power supply	24V/1A DC power
Drive dimension	136 x 113 x 108mmmm (L×W×H)
Weight	1.64 kg
Power consumption	< 15 W
Condition temperature	0–40℃
Relative humidity	< 80%
IP rate	IP31

EM-MiniPump and SP-MiniPump speed/flow rates reference

Rotation speed (rpm)	Flow rates (mL/min) and tubing (1 mm wall thickness, dual channel)			
	ID 1 mm	ID 2 mm	ID 2.5 mm	ID 3 mm
5	0.25	0.90	1.28	1.78
10	0.49	1.84	2.59	3.52
15	0.74	2.76	3.85	5.30
25	1.25	4.57	6.43	8.80
40	2.00	7.31	10.25	14.02
50	2.52	9.14	12.78	17.47
75	3.76	13.64	19.04	26.12
100	5.03	18.17	25.42	35.34
200	10.12	36.45	51.27	71.44
250	12.63	45.75	64.34	88.35
300	15.01	54.63	76.84	108.39

Rotation speed (rpm)	Flow rates (mL/min) and tubing (1.6 mm wall thickness, single channel)			
	13# Tubing ID 0.8 mm	14# Tubing ID 1.6 mm	16# Tubing ID 3.1 mm	25# Tubing ID 4.8 mm
5	0.12	0.56	1.97	3.26
10	0.26	1.15	3.90	6.41
15	0.39	1.74	5.80	9.52
25	0.66	2.88	9.59	15.74
40	1.08	4.59	15.29	25.15
50	1.34	5.69	18.96	31.14
75	2.00	8.54	28.36	46.55
100	2.73	11.37	37.86	61.98
200	5.46	22.76	76.02	124.14
250	6.81	28.40	95.08	153.63
300	8.26	33.88	114.31	190.00

HROMalytic +61(0)3 9762 2034
ECHnology Pty Ltd
Australian Distributors
Importers & Manufacurers
www.chromtech.net.au
Website NEW : www.chromalytic.net.au E-mail : info@chromtech.net.au Tel: 03 9762 2034 . . . in AUSTRALIA

Warmly celebrate Baoding Shenchen Precision Pump Co., Ltd is awarded as Baoding Peristaltic pump Engineering Technology Research Center.

Profit Hot Model

Lab2015

(Glory Edition)

LAB
Intelligent model

Touch screen control, animation display

ABS engineering plastic housing

scan QR code

SHENCHEN

CHROMalytic +61(0)3 9762 2034
TECHnology Pty Ltd
Australian Distributors
Importers & Manufacurers
www.chromtech.net.au
Website NEW : www.chromalytic.net.au E-mail : info@chromtech.net.au Tel: 03 9762 2034 . . . in AUSTRALIA

Warmly celebrate Baoding Shenchen Precision Pump Co., Ltd is awarded as Baoding Peristaltic pump Engineering Technology Research Center.

Celebrating "Baoding Peristaltic Pump Engineering Technology Research Center" co-established by overnment and Baoding Shenchen Precision Pump Co.,Ltd.

Shenchen Precision Pump achieves to great success in world market depends on technical strength, good cooperate reputation, high quality and unique patented products, and received a lot of attention from Baoding government, Technology Bureau, especially Mayor. After survey, investigation and many times judgment of Shenchen by specialists and professional users, Government and Baoding Shenchen Precision Pump Co.,Ltd co-establish "Baoding Peristaltic Pump Engineering Technology Research Center" which is the only authority research institution in Baoding peristaltic pump industry.

Lab2015 Product Introduction

外观设计专利证书

Intelligent flow rate peristaltic pump with ABS engineering housing, streamlined body design. Industrial grade 4.3 inch true color LCD screen, touch screen control. Speed range: 0.1-100rpm, flow rate range: 0.000067-380ml/min. Dynamic display transferring status, flow rate data, setting parameters. The system configuration displays in the same screen. Calibration and online micro adjusting function. 3 measurement mode: fixed volume measurement, fixed time and volume, timer start and stop. Meeting multiple complicate transferring requirement. It is the ideal choice for laboratory , instruments and industrial production.

Lab2015 Product Composition and Flow rate Range

Drive	Speed Range(rpm)	Pump Head	Tubing Size	Flow Rate(ml/min)
Lab2015	0.1-100rpm	YZ1515x	13#、14#、19#、16# 25#、17#、18#	0.007~380
		YZ2515x	15#、24#	0.17~290
		MC1-MC8(10)	Inner diameter: 0.13~3.17mm Wall thickness: 0.8~1mm	0.000067~32
		MC1-MC8(6)		0.00008~42

SHENCHEN

CHROMalytic +61(0)3 9762 2034
TECHnology Pty Ltd
Australian Distributors
Importers & Manufacurers
www.chromtech.net.au
Website NEW : www.chromalytic.net.au E-mail : info@chromtech.net.au Tel: 03 9762 2034 . . . in AUSTRALIA

Flow Rates Peristaltic Pump

LabV1

ABS engineering plastic housing LabV Series

Touch screen control, Dynamic display

ABS engineering plastic housing

Product Introduction

Intelligent type flow rate peristaltic pump,with ABS engineering plastic housing, streamlined body design.Industrial grade 4.3" color display with touch screen control.Speed range is 0.1–600 rpm, flow rate rangeis 0.000067–2280ml/min. Dynamic display transferring status.Flow rate data,setting parameters and system configuration display in the same screen.Intelligent calibration and online micro adjusting function.3 kinds of metering mode: fixed volume metering,fixed time and volume,timer start and stop,meet different transferring and dispensing request.The unique motor working status output signal,can be used for other equipments monitoring the peristaltic pump working status. Various external control modes for option,also have programmable external control mode. Support RS232 and RS485 Interface, standard MODBUS communication protocol , achieve external control under different industrial conditions. It is the ideal choice for laboratory, instrument and industrial production.

Suitable Pump Head

Multichannel Pump Head (MC1-MC12)

Easy Load Pump Head (Yz1515x、YZ2515x)

Multichannel Pump Head (DG1~DG12)

Fast Load Pump Head (DZ25-3L)

Standard Pump Head (SN15、SN25)

LabV1/LabV3/LabV6

1.Portable handheld design, feel comfortable and stable.
2.Delicate touch pen design.
3.Multifunction protective cover for external control interface, can be used for tool box, install common tools.
4.Hidden external control Interface, protective cover can protect the interface and data lines effectively.

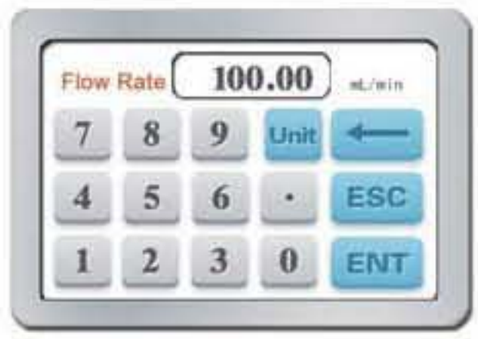

Flow Setting Interface

External control speed setting interface

Fixed Volume Measurement Setting Interface

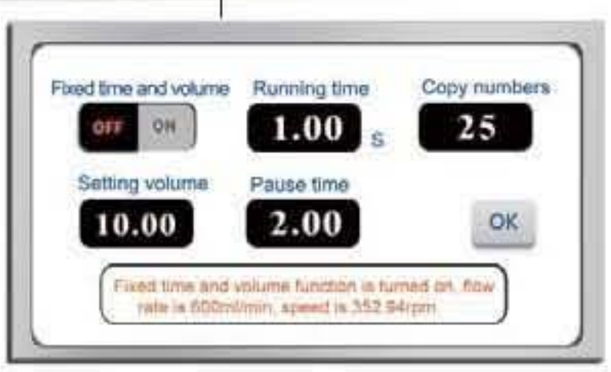

Fixed Time and Volume Setting Interface

Timer Start and Stop Setting Interface

CHROMalytic +61(0)3 9762 2034
TECHnology Pty Ltd
Australian Distributors
Importers & Manufacurers
www.chromtech.net.au
Website NEW : www.chromalytic.net.au E-mail : info@chromtech.net.au Tel: 03 9762 2034 . . . in AUSTRALIA

Flow Rates Peristaltic Pump

INDUSTRIAL
Intelligent Type

Servo Motor Drive

PPS material pump head or Aluminum alloy pump head and stainless steel drive housing
V6-12L/YZ35、V6-6L/DZ25-6L、V6-3L/DZ25-3L

Product Introduction

Intelligent flow rate type industrial peristaltic pump with servo motor drive, use 4.3" color display with touch screen control. Speed range: 0.1–600 rpm. Flow rate range: 0.000211–12 L/min. Dynamic display transferring state, flow rate data, setting parameters and system configuration in the same screen. Intelligent calibration and online micro adjusting function. 3 measurement mode: fixed volume measurement, fixed time and volume, timer start and stop, meet different transferring and dispensing requirement. Unique motor working status output signal, can be used for other equipments monitoring the peristaltic pump working status. Plenty external control mode for option, also have programmable external control mode. The pump support RS232 and RS485 interface with standard MODBUS protocol to achieve external control in different industrial conditions. It is the first choice for high level industrial sites, large flow rate, high precision and intelligent control liquid transferring.

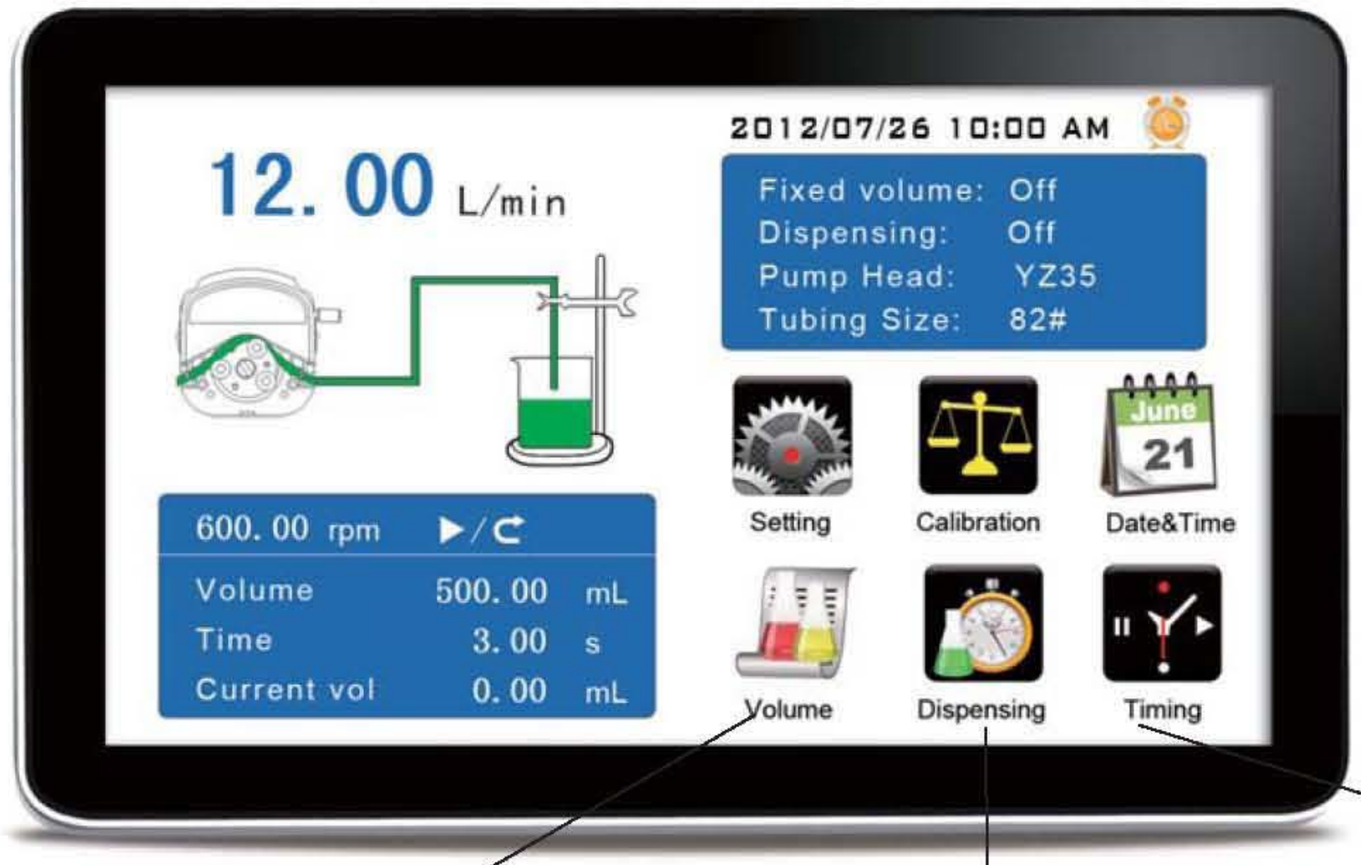

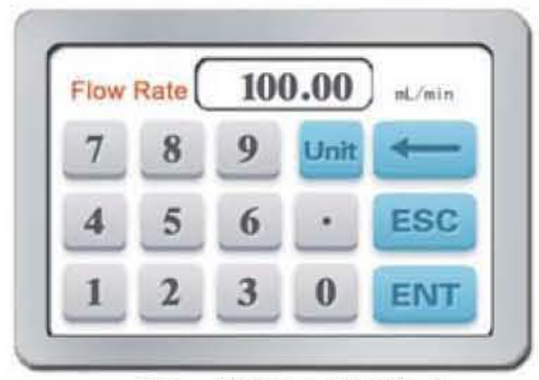

Flow Setting Interface

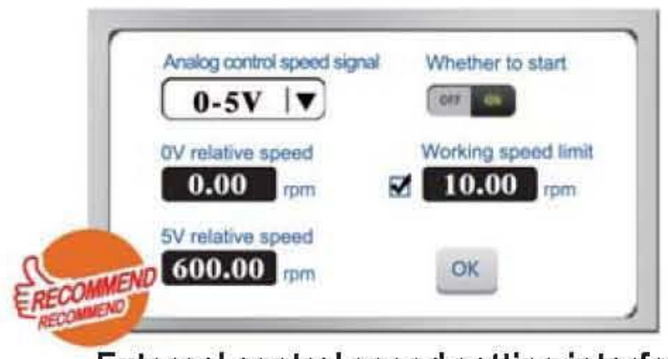

External control speed setting interface

Fixed Volume Measurement Setting Interface

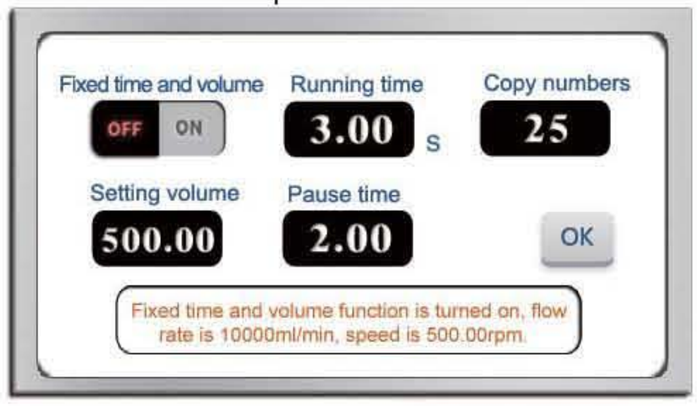

Fixed Time and Volume Setting Interface

Timer Start and Stop Setting Interface

CHROMalytic +61(0)3 9762 2034
TECHnology Pty Ltd
Australian Distributors
Importers & Manufacurers
www.chromtech.net.au
Website NEW : www.chromalytic.net.au E-mail : info@chromtech.net.au Tel: 03 9762 2034 . . . in AUSTRALIA

Flow Rates Peristaltic Pump

Features

- Imported 4.3" color display with touch screen, clear picture quality, more guarantee quality. Dynamic display working state, flow rate, rotation speed, setting parameters and system setting in the same screen.
- Imported touch screen operation, high hardness, antiscratch, high sensitivity, pay attention to users ' experience.
- Servo motor drive, precise control, strong power, low vibration and low noise.
- Shenchen-V-CIR circuit system, use imported chips, computing speed fast, reliable performance, working stable.
- Shenchen-V-EMB operation system, embedded software design, powerful function, friendly interface, pay attention to users' experience.
- Intelligent calibration function, can calibrate the flow rate or dispensing volume, ensure the flow rate accuracy. Suitable f high precision transferring liquid.
- Fixed volume measurement function: After turn on this function, the pump will measure the liquid volume automatically, it will stop automatically after the volume reach the set value.During the process, you can change the flow rate freely. It is suitable for laboratory liquid dosing and chemical reaction process.
- Fixed time and volume: After turn on this function, the pump will transfer fixed volume within set time. It is suitable for liquid dispensing in laboratory and industrial production.
- Timer start and stop function: Can set the pump start and stop time freely, reach automated control.

Installation Sizes Drawing (Unit: mm)

V6-3L

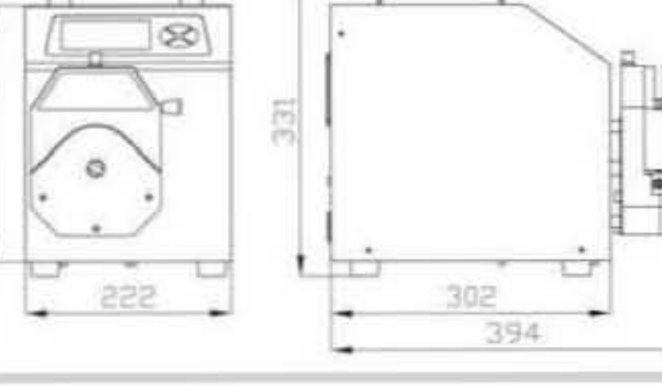

V6-6L

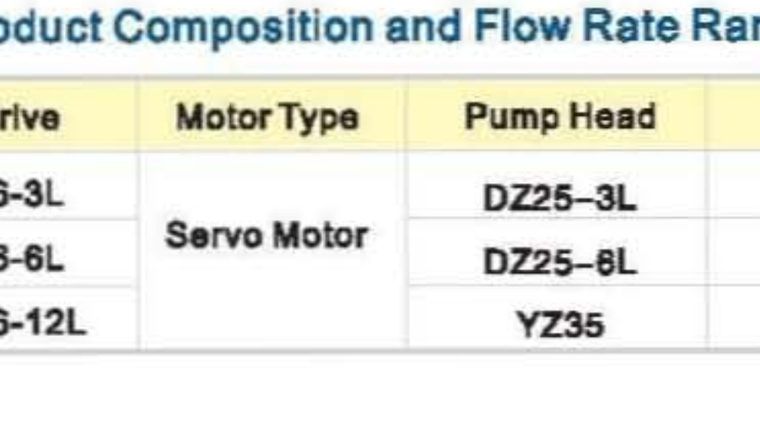

V6-12L

- Plenty external control function, besides start/stop, direction, speed control, RS485/RS232 interface, our pump have Shencahn-V-EMB-PGM programmable external control function to meet special industrial control request.

External Control Schematic

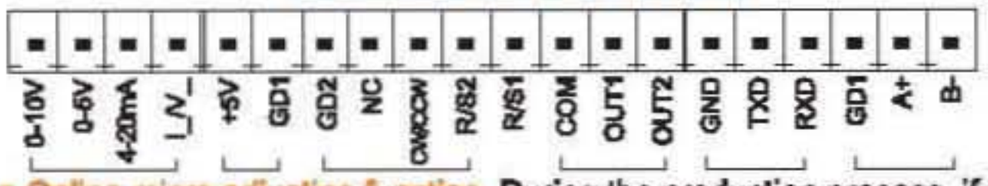

- Online micro adjusting function. During the production process, if the tubes fatigue or abrasion, you can use the online micro adjusting function to adjust the flow rate without stopping the pump.
- Unique accurate angle control technology, achieve high accuracy dispensing and dosing.
- Quick filling function,not only can be used for washing the tubing, but also can fill liquid to the tubing fast.
- Automatic temperature control system, reducing the fan noise effectively.
- Power-shedding memory function, store the running parameters in time, safe and reliable.
- Strong anti-jamming feature, wide voltage design, suitable for complex power supply environment.
- Circuit board spray with three paint, anti-dust, anti-moisture, anti-static, resist corrosion.
- 304 stainless steel housing, comply with pharmaceutical GMP certificate requirement. Meantime, use seamless welding technology, avoid accidental spilled liquid on the housing infiltrate inside, to protect the inside circuit board.
- DZ25-3L, DZ25-6Land YZ35 aluminum alloy pump head, 304 stainless steel rollers, strong rigidity, high accuracy, reliable performance,excellent quality.

Technical Specifications

Flow rate range	V6-3L: 0.211~3600 mL/min
	V6-6L: 0.3~6000 mL/min
	V6-12L: 0.00069~12 L/min
Speed range	0.1~600 rpm
Speed resolution	0.01 rpm
Flow rate resolution	0.01 mL
Flow rate accuracy	< ± 0.5%
Back suction angle	0~360°
Output pressure	0.3Mpa;
Motor type	Servo motor
Circuit system	Shenchen-V-CIR
Operation system	Shenchen-V-EMB
Display	4.3" color display with touch screen
Control method	Touch screen and membrane keypad
External control signal	0-5V, 0-10V, 4-20mA for option
Start/stop, change direction signal	Passive switch signal, such as : foot pedal.
	Active switch signal: 5V, 12V, 24V for option.
Communication interface	RS232,RS485,support MODBUS protocol (RTU) mode.
Output Interface	Output motor working status (Open-Collector output)
Power supply	AC 220V ± 10% 50Hz/60Hz (standard)
	AC 110V ± 10% 50Hz/60Hz (optional)
Drive dimension (L×W×H)	V6-3L: 223 × 152 × 200mm; V6-6L: 283 × 192 × 218mm
	V6-12L: 302 × 222 × 275mm
Weight	V6-3L: 5.02kg; V6-6L: 7.85kg; V6-12L: 13.14kg;
Power consumption	V6-3L: < 80W ; V6-6L: < 180W ; V6-12L: < 300W
Condition temperature	0~40℃
Relative humidity	< 80%
IP rate	IP31

Product Composition and Flow Rate Range

Drive	Motor Type	Pump Head	Tubing Size	Speed Range(rpm)	Flow Rate Range(mL/min)
V6-3L	Servo Motor	DZ25-3L	15#、24#、35#、36#	0.1~600	0.211~3600
V6-6L		DZ25-6L	15#、24#、35#、36#		0.3~6000
V6-12L		YZ35	26#、73#、82#		0.69~12000

CHROMalytic +61(0)3 9762 2034
TECHnology Pty Ltd
Australian Distributors
Importers & Manufacurers
www.chromtech.net.au
Website NEW : www.chromalytic.net.au E-mail : info@chromtech.net.au Tel: 03 9762 2034 . . . in AUSTRALIA

Flow Rates Peristaltic Pump

V Series peristaltic pump has various external control interface, can meet different equipment matching requirements.

● External control interface definition

1.Analog signal Input port: Choose the external control speed signal from the external control setting interface. Turn on the external control speed function, control the motor speed range through the analog signal.
2.Internal isolation 5VDC output.
3.External control start/stop、reversing signal input port: active signal Input.
4.R/S1 external control start/stop signal input port: passive signal input.
5.Motor running status output port: output current running status of the motor.
6.RS232 interface: choose RS232 in communication setting interface, this port is effective.
7.RS485 interface: choose RS485 in communication setting interface, this port is effective.

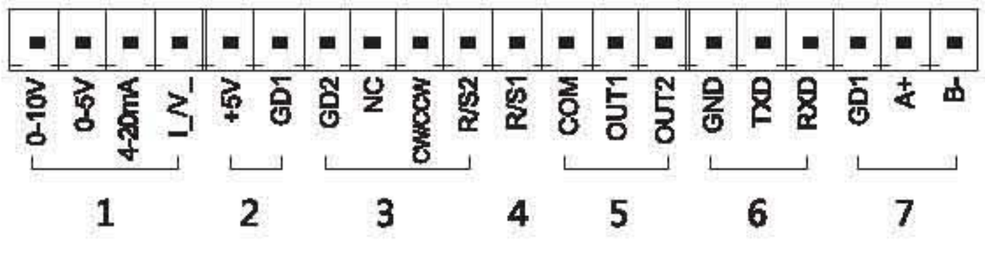

V Series peristaltic pump external control setting interface.

● Choose external control start/stop、direction signal

1.Can set external control start/stop or reversing switch whether effective or not respectively.
2.Can choose control mode according to requirement: pulse mode or level mode.
3.Can set the foot switch whether effective or not.
4.Can choose switch value signal 's high level values according to customers' main control equipment: 5V(default)、12V、24V.

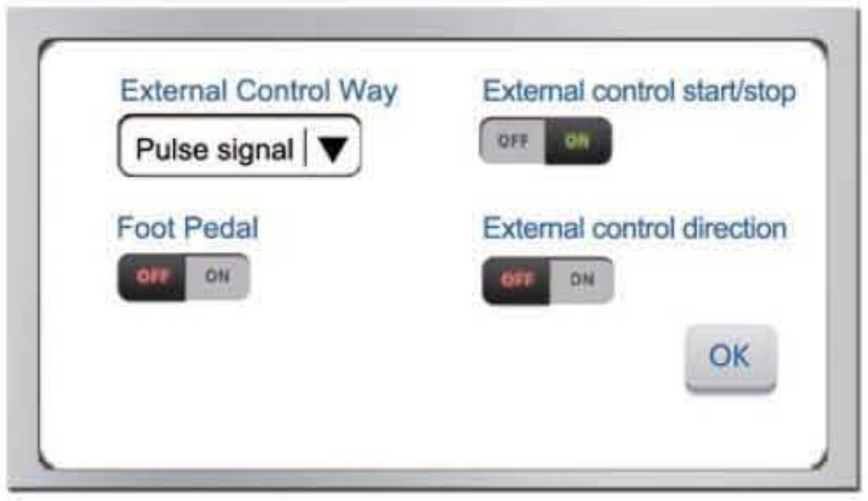

● Programmable external control speed setting

1.Can choose analog signal source according to requirements: 0-5V, 0-10V, 4-20mA.
2.When the signal source is chosen, can choose maximum speed and minimum speed which corresponding to the signal source's maximum value and minimum value according to actual demand, to reach user-defined rotate speed range purpose.
3.Working speed limit is at the situation that the linear relation of analog quantity signal and rotating speed keeps invariant, set peristaltic pump's maximum working rotate speed. This setting can avoid production accident caused by sudden change of transfer fluid amount with the sudden change of external analog signal.

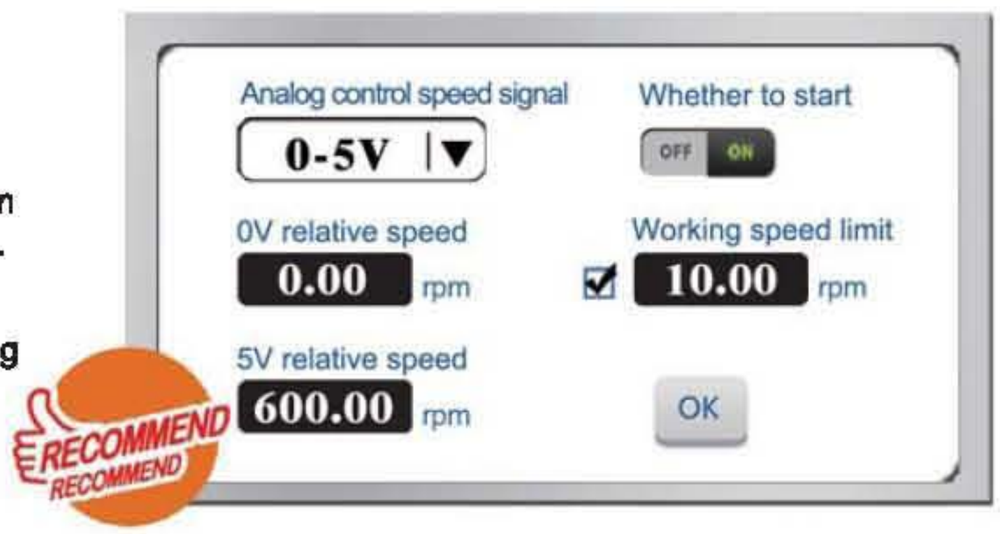

● Communication Setting

1.Support RS232 and RS485 Interface, can be chosen in software interface.
2.Support various Baud rate : 2400bps, 4800bps, 9600bps, 19200bps.
3.Can choose standard modbus communication protocol or Shenchen communication protocol to control, modbus communication protocol is suitable to match with industrial site HMI, PLC or other upper computer which support standard modbus communication protocol; Shenchen communication protocol is suitable to match with Single-chip micro computer or upper computer on computer programme.

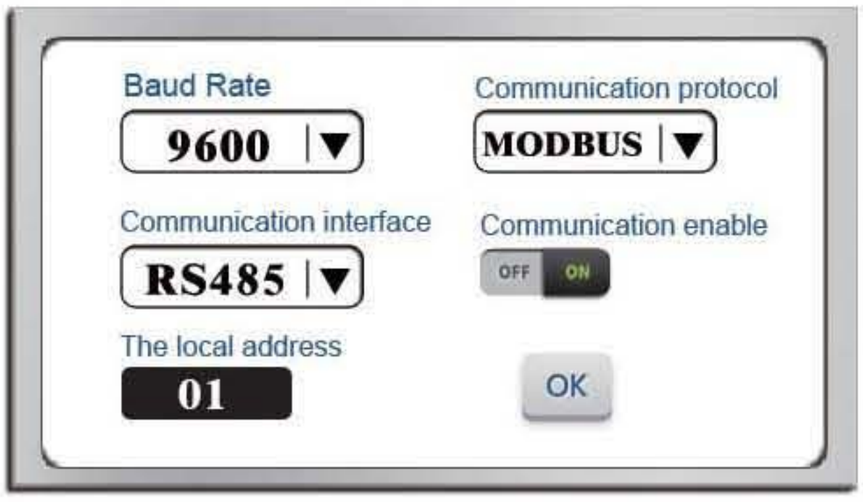

CHROMalytic +61(0)3 9762 2034
TECHnology Pty Ltd
Australian Distributors
Importers & Manufacurers
www.chromtech.net.au
Website NEW : www.chromalytic.net.au E-mail : info@chromtech.net.au Tel: 03 9762 2034 . . . in AUSTRALIA

Flow Rates Peristaltic Pump

TC50

Servo Motor Drive

TC50
304 stainless steel housing

Special for flow injection analyzer

Product Introduction

Servo motor drive TC50/MT12 peristaltic pump, special for flow injection analyzer. MT12 pump head, use overall block design to improve the accuracy between channels.The error between channels <3%. TC50 control unit, use 4.3" color display with touch screen control. Speed range: 0.1-50 rpm, flow rate range: 0.0016-10.5mL/min. Dynamic display the transferring status, flow rate, setting parameters and system configuration in the same screen. Intelligent calibration and online micro adjusting function. 3 measurement modes: Fixed volume measurement, Fixed time and volume, Timer start and stop achieve different transferring and dispensing request. Unique motor working status output signal, can be used for other equipments to monitor the peristaltic pump working state. Different external control modes for selection, also have programmable external control mode. Support RS232 andRS485 interface, MODBUS protocol. The TC50 pump is the first choice for multichannel, high precision and micro flow rate liquid transferring.

Technical Specifications

Flow rate range	0.0016–10.5 mL/min
Speed range	0.1–50 rpm
Speed resolution	0.01 rpm
Flow rate resolution	0.01 μl
Flow errors between channels	<3%
Back suction angle	0-360°
Output pressure	0.15 Mpa
Motor type	Servo motor
Circuit system	Shenchen-V–CIR
Control system	Shenchen-V–EMB
Display	4.3" color display with touch screen
Control method	Touch screen and membrane keypad
External control signal	0-5V, 0-10V, 0-20mA for option
Start/stop. direction signal	Passive switch signal, such as: foot pedal switch Active switch signal: 5V, 12V, 24V for option
Communication interface	RS232, RS485 support MODBUS protocol (RTU mode)
Output interface	Output motor working status (Open-Collector output)
Power supply	AC 220v ± 10% 50Hz/60Hz (Standard) AC 110v ± 10% 50Hz/60Hz (Optional)
Drive dimension	345×150×217mm (L×W×H)
Drive weight	8.02 kg
Power consumption	<50W
Environment temperature	0–40℃
Relative humidity	<80%
IP rate	IP31

Installation Sizes Drawing (Unit: mm)

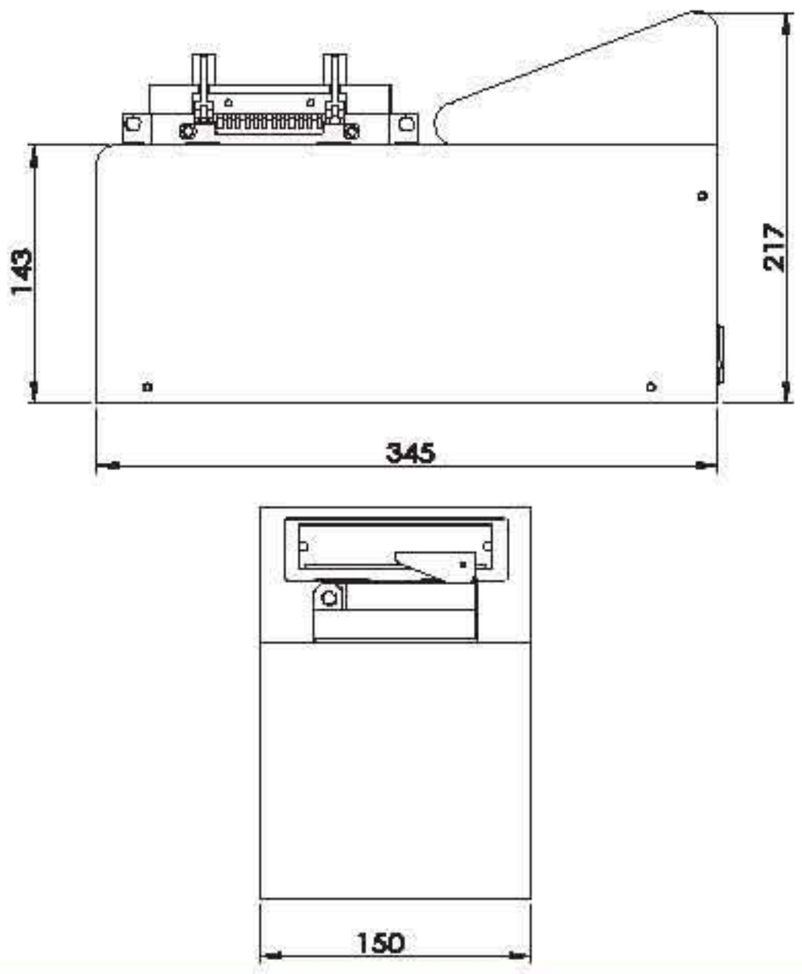

Product Composition and Flow Rate Range

Drive	Motor Type	Pump Head	Tubing Size	Speed Range(rpm)	Flow Rate Range(mL/min)
TC50	Servo Motor	MT12	0.51×0.9	0.1–50	0.0016~0.84
			1.02×0.86		0.005~2.5
			2.06×0.86		0.015~7.5
			2.54×0.86		0.020~10.5

CHROMalytic +61(0)3 9762 2034
TECHnology Pty Ltd
Australian Distributors
Importers & Manufacurers
www.chromtech.net.au
Website NEW : www.chromalytic.net.au E-mail : info@chromtech.net.au Tel: 03 9762 2034 . . . in AUSTRALIA

Dispensing Peristaltic Pump

LabF6

A
ABS engineering plastic housing LabF Series

Touch screen control, Dynamic display

ABS engineering plastic housing

LAB Intelligent Type

CE

LabF6/2*YZ1515X(PSF)

F6

B
304 stainless steel housing F series

Touch screen control, Dynamic display

304 stainless steel housing

CE

LAB Intelligent Type

F6/YZ1515x(PSF)

Product Introduction

Intelligent type dispensing peristaltic pump, with ABS engineering plastic housing, streamlined body design. Industrial grade 4.3" color display with touch screen control. Can preset dispensing volume, dispensing time, pause time, copy numbers and back suction angle. Dynamic display the working status, dispensing data, setting parameters and system configuration in the same screen. Intelligent calibration and online micro adjusting function. Can connect with foot pedal or receive switch signal, achieve external control. The unique motor working status output signal, can be used for other equipments monitoring the peristaltic pump working status. This pump suitable for large flow volume, high efficiency and precision filling.

Suitable Pump Head

Multichannel Pump Head (MC1-MC12)

Easy Load Pump Head (Yz1515x、YZ2515x)

Multichannel Pump Head (DG1~DG12)

Fast Load Pump Head (DZ25-3L)

Standard Pump Head (SN15、SN25)

Typical Application

- Widely used in medicine and chemicals,such as oral liquid,diagnostic reagents.
- Cosmetic dispensing, such as perfume, lip gloss.

① Filling Countersunk
② Filling Nozzle
③ Foot petal swich

Features

- Imported 4.3" color display with touch screen,clear picture quality, more guarantee quality.Dynamic display dispensing status,dispensing volume,dispensing time,pause time,copy numbers and system setting in the same screen.
- Imported touch screen operation, high hardness, anti-scratch, high sensitivity, pay attention to users experience.
- Stepper motor drive, control precisely.
- Shenchen-F-CIR circuit system, use imported chips, computing speed fast, reliable performance, working stable.
- Shenchen-F-EMB operation system, embedded software design, powerful function, friendly interface, pay attention to users' experience. Shenchen-F-EMB operation system with unique accurate angle control technology, achieve high accuracy liquid filling and dispensing.
- Intelligent calibration function, can calibrate the flow rate or dispensing volume, ensure the flow rate accuracy. Suitable for high precision liquid filling.
- The dispensing total number counting function, need to clear the numbers by manual. This is convenient for counting dispensing numbers when manual dispensing.
- Online micro adjusting function. During the production process, if the tubes fatigue or abrasion, you can use the online micro adjusting function to adjust the flow rate without stopping the pump.
- The pump can store 60 commonly used filling modes, save users setting time.
- Back suction angle setting, avoid liquid drop off when the pump stop working.
- External control start/stop function, it can connect with foot pedal switch, also can be unified controlled by the host computer when working in filling line.
- Automatic temperature control system, reducing the fan noise effectively.
- Power down memory function, store the running parameters in time, safe and reliable.
- Fast filling function, not only can be used for washing the tubing, but also can fill liquid to the tubing fast.
- Strong anti-jamming feature, wide voltage design, suitable for complex power supply environment.
- Circuit board spray with three paint, anti-dust, anti-moisture, anti-static, resist corrosion.

HROMalytic +61(0)3 9762 2034
ECHnology Pty Ltd
Australian Distributors
Importers & Manufacurers
www.chromtech.net.au
Website NEW : www.chromalytic.net.au E-mail : info@chromtech.net.au Tel: 03 9762 2034 . . . in AUSTRALIA

Dispensing Peristaltic Pump

Technical Specifications

Flow rate range	LabF1/F1: 0.00067~900 mL/min
	LabF3/F3: 0.00067~2100 mL/min
	LabF6/F6: 0.00067~3600 mL/min
Speed range	1–600rpm
Speed resolution	0.01rpm
Dispensing volume range	0.1–9999.99mL
Dispensing volume resolution	0.01mL
Dispensing time	0.5–9999.99s
Pause time	0.5–9999.99s
Time resolution	0.01s
Copy numbers	1–9999 numbers, setting '0' means unlimited
Back suction angle	0–360°
Dispensing accuracy	< ±0.5%
Motor type	Stepper motor
Circuit system	LabF Series :Shenchen-LabF-CIR,F Series :Shenchen-F-CIR
Control system	LabF Series :Shenchen-LabF-EMB,F Series :Shenchen-F-EMB,
Display	4.3"color display with touch screen
Control method	Touch screen and membrane keypad
Start/stop, direction signal	Passive switch signal, such as foot pedal switch
	Active switch signal: 5V, 12V and 24V for option
Communication Interface	RS232/RS485 support MODBUS protocol (RTU mode)

Output Interface	Output motor working status (Open-Collector output)
Power supply	220V ± 10%, 50Hz/60Hz (standard), 110V ± 10%, 50Hz/60Hz (optional)
Outlet pressure	0.1Mpa(0.86–1.0mm wall thickness tubing) 0.1–0.27Mpa (1.6–2.4mm wall thickness tubing)
Drive dimension	LabF Series:261.4 x 157.3 x 236.9mm (L x W x H) F Series:219.6 x 152 x 211.6mm (L x W x H)
Drive weight	LabF Series :4.40 kg, F Series :4.20 kg
Power consumption	< 50W
Environment temperature	0–40℃
Relative humidity	< 80%
IP rate	IP31

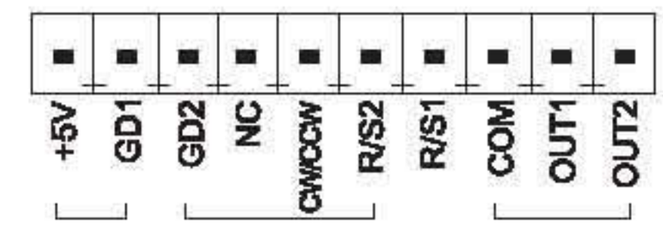

External Control Schematic

Product Composition and Flow Rate Range

Dispensing peristaltic pump		Pump head & Flow rates (mL/min)							
		YZ1515x	YZ2515x	MC1~MC12(10)	MC1~MC12(6)	DZ25–3L	SN25	SN15–14	SN15–16
Drive & speed \ Tubing		13#、14#、19#、16# 25#、17#、18#	15#、24#	Inner diameter: 0.13–3.17mm Wall thickness: 0.86–1mm		15#24# 35#36#	24#	14#	16#
LabF1/F1	1–150rpm	0.07~570	1.7~435	0.000067–32 (suggest working rotating speed≤ 150rpm)	0.00008–45 (suggest working rotating speed≤ 150rpm)	2.11 ~ 900	2.5 ~ 375	0.24 ~ 36	0.88 ~ 132
LabF3/F3	1–350rpm	0.07~1330	1.7~1015			2.11 ~ 2100	2.5 ~ 875	0.24 ~ 84	0.88 ~ 308
LabF6/F6	1–600rpm	0.07~2280	1.7~1740			2.11 ~ 3600	2.5 ~ 1500	0.24 ~ 144	0.88 ~ 528

LabF6/F6 Filling Volume Reference Parameter(Media is water)

Controller	Pump head	Tubing	Filling Volume (mL)	Filling Time (s)	Filling Accuracy (± %)	Output(pcs/min)	Motor Speed(rpm)
LabF6/F6	YZ1515x YZ2515x	13#	0.1	0.5	±5ul	60	204.083
		13#	0.3	0.7	1.5	42	426.251
		13#	0.5	1	0.8	30	516.081
		13#	1	2	0.5	15	517.152
		14#	2	1	1	30	446.724
		14#	3	1.5	0.8	20	446.479
		19#	5	1.2	1	25	454.919
		16#	7	1	0.5	30	457.705
		25#/15#	10	1	1	30	303.426
		25#/15#	15	1	0.8	30	461.273
		25#/15#	20	1.2	0.5	25	518.945
		17#/24#	30	1.2	0.8	25	462.725
		17#/24#	50	2	0.5	15	461.595
		18#	80	2.5	0.5	12	427.274
		18#	100	3	0.5	10	446.583

CHROMalytic +61(0)3 9762 2034 TECHnology Pty Ltd
Australian Distributors Importers & Manufacurers www.chromtech.net.au
Website NEW : www.chromalytic.net.au E-mail : info@chromtech.net.au Tel: 03 9762 2034 . . . in AUSTRALIA

Dispensing Peristaltic Pump

INDUSTRIAL
Intelligent Type

Servo Motor Drive

PPS material pump head or Aluminum alloy pump head and stainless steel drive housing

F6-12L/YZ35、F6-6L/DZ25-6L、F6-3L/DZ25-3L

Product Introduction

Servo motor drive intelligent dispensing industrial peristaltic pump, use imported 4.3"color display with touch screen control, can preset the dispensing volume, dispensing time, pause time, copy numbers and back suction angle. Dynamic display the working status, dispensing parameters, setting parameters, system configuration in the same screen. Intelligent calibration and online micro adjusting function. Can connect with foot pedal or receive switch signal, achieve external control. Unique motor working status output signal, can be used for other equipments monitoring the peristaltic pump working status. This pump is suitable for large flow volume, high efficiency and high accuracy filling. Such as: filling 500ml, the efficiency is 15 bottles per minute. Accuracy is ±0.5%.

Features

- Imported 4.3"color display with touch screen, clear picture quality, more guarantee quality. Dynamic display dispensing status, dispensing volume, dispensing time, pause time, copy numbers and system setting in the same screen.
- Imported touch screen operation, high hardness, anti-scratch,high sensitivity, attention users ' experience.
- Servo motor drive, precise control, strong power, low vibration and low noise.
- Shenchen-F-CIR circuit system, use imported chips, computing speed fast, reliable performance, working stable.
- Shenchen-F-EMB operation system,embedded software design,powerful function,friendly interface,pay attention to users' experience.
- Shenchen-F-EMB operation system with unique accurate angle control technology, achieve high accuracy dispensing and dosing.
- Intelligent calibration function,can calibrate the flow rate or dispensing volume, ensure the flow rate accuracy.Suitable for high precision liquid filling.
- Online micro adjusting function. During the production process, if the tubes fatigue or abrasion, you can use the online micro adjusting function to adjust the flow rate without stopping the pump.
- The pump can store 60 commonly used filling modes, save users setting time.
- Back suction angle setting, avoid liquid drop off when the pump stop working.
- External control start/stop function, it can connect with foot pedal switch. The pump also can be unified controlled by the host computer when working in filling line.
- Automatic temperature control system, reducing the fan noise effectively.
- Load-shedding memory function, store the running parameters in time, safe and reliable.
- Fast filling function, not only can be used for washing the tubing, but also can fill liquid to the tubing fast.
- Strong anti-jamming feature, wide voltage design, suitable for complex power supply environment.
- Circuit board spray with three paint, anti-dust, anti-moisture, antistatic, resist corrosion.
- 304 stainless steel housing, comply with pharmaceutical GMP certificate requirement. Meantime, use seamless welding technology, avoid accidental spilled liquid on the housing infiltrate inside, to protect the inside circuit board.
- DZ25-6L aluminum alloy pump head, 304 stainless steel rollers, strong rigidity,high accuracy,reliable performance,excellent quality.

Technical Specifications

Flow rate range	F6–3L: 2.11~3600 mL/min F6–6L: 3~6000 mL/min F6–12L: 0.0069~12 L/min
Speed range	1–600rpm
Speed resolution	0.01rpm
Dispensing volume range	0.1–9999.99mL
Dispensing volume resolution	0.01mL
Dispensing time	0.5–9999.99s
Pause time	0.5–9999.99s
Time resolution	0.01s
Copy numbers	1–9999 times,0 represent infinite.
Back suction angle	0–360°
Dispensing accuracy	±0.5%
Motor type	Servo motor
Circuit system	Shenchen-F-CIR
Operation system	Shenchen-F-EMB
Display	4.3"color display with touch screen
Control method	Touch screen and membrane keypad
Start/stop, change direction	Passive switch signal,such as:foot pedal. Active switch signal: 5V, 12V, 24V for option.
Communication interface	RS232,RS485,support MODBUS protocol
Output Interface	Output motor working status (Open-Collector output)
Output pressure	0.3Mpa
Power supply	220V ± 10%, 50Hz/60Hz (standard), 110V ± 10%, 50Hz/60Hz (optional)
Drive dimension (L×W×H)	F6–3L: 223×152×200mm ; F6–6L: 283×192×218mm F6–12L: 302×222×275mm
Weight	F6–3L: 5.02kg; F6–6L: 7.85kg; F6–12L: 13.14kg;
Power consumption	F6–3L: < 80W ; F6–6L: < 180W ; F6–12L: < 300W
Condition temperature	0–40℃
Relative humidity	< 80%
IP rate	IP31

CHROMalytic TECHnology Pty Ltd +61(0)3 9762 2034
Australian Distributors
Importers & Manufacurers
www.chromtech.net.au
Website NEW : www.chromalytic.net.au E-mail : info@chromtech.net.au Tel: 03 9762 2034 . . . in AUSTRALIA

Dispensing Peristaltic Pump

F6-12L membrane keypad and interface schematic

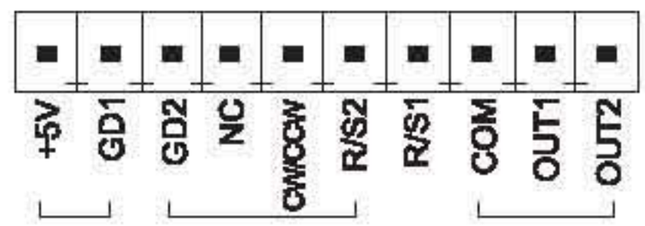

F6 Series External Control Schematic

Filling Volume Reference Parameter(Media is water)

Controller	Pump head	Tubing	Filling Volume (mL)	Filling Time (s)	Filling Accuracy (±%)	Output(pcs/min)	Motor Speed(rpm)
F6-3L	DZ25-3L	15#	16	1	0.5	40	443.540
		24#	30	1.2	1.0	35	454.877
		35#	150	4	0.6	8	447.940
		36#	200	4	0.6	8	481.802
F6-6L	DZ25-6L	15#	80	4	0.4	13	396.800
		24#	150	4	0.4	13	440.700
		35#	200	3.2	0.5	8	439.540
		36#	300	3.5	0.5	8	473.208
F6-12L	YZ35	26#	150	3	0.5	10	423.254
		73#	300	3	0.5	10	457.805
		82#	500	3	0.5	10	458.451

Drive	Pump head	Tubing Size	Filling Volume	Filling Time	Actual Filling Volume(mL)										Filling Accuracy	
F6-3L	DZ25-3L	15#	16mL	1s	15.97	15.97	16.00	16.06	15.97	15.92	15.96	16.02	16.01	15.97	0.50%	-0.50%
					15.98	16.00	16.04	16.08	15.92	15.95	16.01	16.01	15.97	15.97		
		24#	30mL	1.2s	29.98	30.12	30.20	30.29	30.06	29.94	30.11	30.18	30.02	29.99	1.00%	-0.20%
					30.23	30.24	30.12	29.99	30.12	30.23	30.20	30.30	30.19	30.11		
		35#	150mL	4s	149.50	149.50	150.10	150.00	149.80	149.00	149.70	149.50	150.10	149.60	0.60%	-0.15%
					149.00	149.90	149.70	149.10	149.50	150.00	150.10	150.10	149.60	149.40		
		36#	200mL	4s	199.70	200.30	200.10	200.30	200.00	200.00	200.70	200.80	200.70	200.40	0.07%	-0.67%
					200.30	200.00	200.30	200.80	200.90	200.70	200.80	200.40	200.50	200.20		
F6-6L	DZ25-6L	15#	80mL	4s	80.2	80.0	80.3	80.2	80.1	80.1	80.2	80.1	80.2	80.1	0.375%	-0.125%
					80.1	79.9	80.1	79.9	80.0	80.1	19.9	80.1	80.1	80.0		
		24#	150mL	4s	149.9	150.2	150.0	150.1	150.0	150.3	150.0	150.1	150.3	150.0	0.200%	-0.067%
					149.9	150.1	150.0	150.0	150.1	150.0	150.1	149.9	150.2	150.2		
		35#	200mL	3.5s	199.7	199.9	200.2	200.2	200.2	199.8	199.8	199.8	200.1	199.9	0.100%	-0.400%
					199.5	199.2	199.5	199.9	199.5	199.3	199.8	199.3	199.6	199.9		
		36#	300mL	3.5s	300.4	300.1	300.3	300.3	300.4	300.1	300.3	300.4	300.6	300.2	0.200%	-0.167%
					300.2	300.0	300.1	300.2	300.2	299.9	299.5	300.5	300.5	300.6		
F6-12L	YZ35	26#	150mL	3s	149.3	150.3	149.6	150.2	150.5	150.1	150.5	150.1	150.5	150.0	0.33%	-0.47%
					150.4	149.9	150.4	150.0	150.3	149.8	150.3	149.9	150.4	150.0		
		73#	300mL	3s	299.9	299.8	300.0	300.1	300.4	300.2	300.4	300.4	300.6	300.5	0.27%	-0.07%
					300.8	300.6	300.5	300.5	300.5	300.6	300.7	300.5	300.6	300.6		
		82#	500mL	3s	500.0	497.8	499.7	498.3	498.4	499.5	498.2	499.7	499.2	498.4	0.38%	-0.44%
					499.5	498.3	501.5	501.9	500.0	501.8	501.1	500.5	501.8	499.6		

Product Composition and Flow Rate Range

Drive	Motor Type	Pump Head	Tubing Size	Speed Range(rpm)	Flow Rate Range(mL/min)
F6-3L	Servo Motor	DZ25-3L	15#、24#、35#、36#	1-600	2.11~3600
F6-6L		DZ25-6L	15#、24#、35#、36#		3.0~6000
F6-12L		YZ35	26#、73#、82#		6.9~12000

CHROMalytic +61(0)3 9762 2034
TECHnology Pty Ltd
Australian Distributors
Importers & Manufacurers
www.chromtech.net.au
Website NEW : www.chromalytic.net.au E-mail : info@chromtech.net.au Tel: 03 9762 2034 . . . in AUSTRALIA

Low Pulse Dispensing Peristaltic Pump

IF3

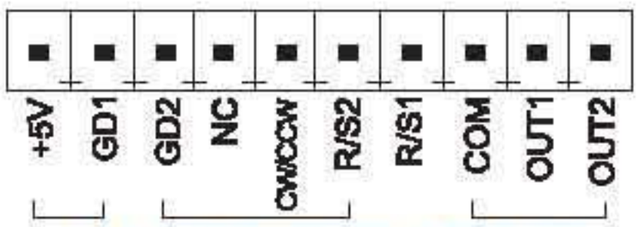

IF3 External Control Schematic

Product Introduction

Servo motor drive Intelligent high precision,low pulse dispensing peristaltic pump.Imported 4.3 inch industrial true color LCD screen display,touch screen control.Speed range:1-350rpm,flow rate range:0.1-4340mL/min.Preset dispensing volume,dispensing time,pause time,copy numbers and back suction angle. Dynamic display working status. Dispensing data,setting parameters and system configuration display in the same screen.Intelligent calibration and online micro adjusting function. The pump can connect with foot pedal switch or receive switch signal,achieve external control. The unique motor working status output signal,can be used for other equipments monitoring the peristaltic pump filling status in realtime.The'Low Pulsation'pump head,special design for high precision filling.Through the phase difference between the two sets of rollers, make the fluid peaks and valleys complementary, then reduce the pulsation of the fluid. Adaptive pressure tubing space, extend the tubing lifetime effectively, actually achieve micro flow rate and large flow rate high precision dispensing.

Installation Sizes Drawing (Unit: mm)

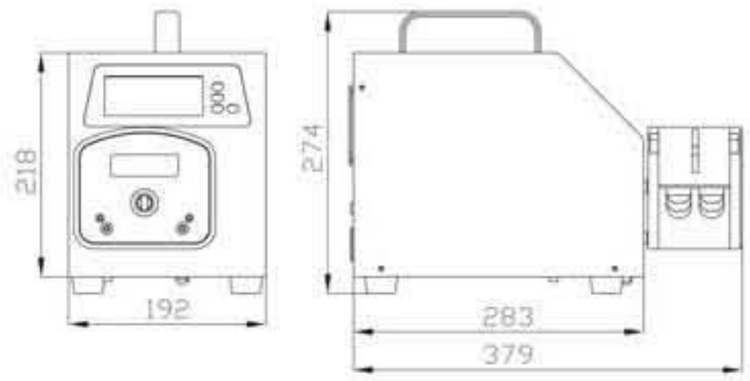

Product Composition and Flow Rate Range

Drive	Motor Type	Pump Head	Tubing Size	Speed Range(rpm)	Flow Rate Range(mL/min)
IF3	Servo Motor	DY15	13#、14#、19#、16#、17#、18#、25#	1–350	0.1~3337
		DY25	15#、24#、35#、36#		4.2~4340

Filling Volume Reference Parameter(Media is water)

Tubing	Filling Volume	Filling Time	Actual Filling Volume(mL)										Filling Accuracy	
14#	0.5mL	0.5s	0.5003	0.5010	0.4982	0.5015	0.5015	0.5010	0.5014	0.5005	0.4981	0.4998	0.32%	-0.37%
			0.5025	0.4983	0.5024	0.5021	0.5020	0.5004	0.5005	0.4997	0.4977	0.5008		
14#	1mL	1s	1.0037	1.0000	1.0026	1.0003	1.0031	1.0015	1.0000	1.0007	1.0023	1.0035	0.42%	-0.44%
			1.0002	1.0020	0.9968	1.0010	0.9986	1.0026	1.0030	1.0029	1.0023	1.0017		
14#	2mL	1s	2.0020	2.0060	2.0039	2.0037	2.0047	1.9844	2.0062	2.0040	1.9851	2.0060	0.60%	-0.58%
			2.0036	1.9940	2.0024	2.0086	1.9946	2.0005	1.9951	2.0068	1.9971	1.9965		
19#	3mL	1s	3.0058	2.9935	3.0092	3.0008	2.9927	3.0072	3.0048	2.9914	3.0040	3.0000	0.31%	-0.33%
			2.9902	3.0048	3.0008	2.9919	2.9984	3.0012	3.0084	2.9915	2.9990	3.0051		
16#	5mL	1s	5.0215	4.9982	5.0145	5.0038	4.9864	5.0183	4.9962	5.0227	5.0158	4.9806	0.50%	-0.39%
			5.0248	5.0070	4.9861	5.0108	4.9995	5.0080	5.0044	4.9868	5.0231	4.9977		
25#	10mL	1s	10.02	10.04	10.00	9.98	10.02	10.03	10.04	10.04	10.01	9.99	0.40%	-0.20%
			10.00	10.02	10.02	10.04	9.99	9.98	10.00	10.04	10.02	10.03		
25#	15mL	1s	15.02	14.97	14.97	14.94	15.00	15.00	14.94	14.95	14.96	14.99	0.13%	-0.47%
			14.96	14.95	14.96	14.99	14.98	14.94	14.93	14.93	14.98	14.96		
17#	30mL	1s	29.92	30.01	29.99	29.91	29.83	29.86	29.91	29.91	29.91	29.89	0.20%	-0.57%
			29.88	29.96	30.03	30.06	30.02	30.02	30.06	29.96	29.96	29.83		
18#	100mL	2.5s	99.80	99.90	99.80	99.90	100.00	100.10	100.10	100.00	100.10	100.00	0.30%	-0.20%
			99.80	100.00	100.10	100.20	99.90	100.10	100.00	100.30	100.10	100.10		
15#	10mL	1s	9.97	10.01	9.96	9.98	10.01	9.96	9.97	9.99	9.96	9.96	0.10%	-0.60%
			10.00	9.94	9.97	10.00	9.96	9.97	10.00	10.00	10.01	9.97		
24#	30mL	1s	29.90	29.80	30.10	29.90	29.90	30.00	29.90	29.90	30.00	29.90	0.33%	-0.67%
			29.90	29.90	29.90	29.90	29.90	29.80	30.00	29.90	29.90	30.00		
35#	70mL	1.2s	69.80	69.90	69.90	69.90	69.70	70.10	70.00	69.70	69.90	69.90	0.43%	-0.43%
			69.90	70.10	70.00	69.90	70.30	69.70	70.10	69.70	69.70	69.90		
36#	100mL	2s	99.80	99.90	99.80	99.80	100.00	99.90	99.90	99.90	99.90	99.90	0.10%	-0.20%
			99.80	99.90	99.90	99.90	100.00	100.10	99.80	100.10	99.90	99.90		

CHROMalytic +61(0)3 9762 2034
TECHnology Pty Ltd
Australian Distributors
Importers & Manufacurers
www.chromtech.net.au
Website NEW : www.chromalytic.net.au E-mail : info@chromtech.net.au Tel: 03 9762 2034 . . . in AUSTRALIA

Filling System (Integrated Type)

DF600

Product Introduction

DF series intelligent type integrated filling system, consist of control unit and integrated filling units, each group have 4 filling units. One controller control 4 groups, total 16 filling units. 4.3" color display with touch screen controll, can preset the filling volume, filling time, pause time, copy numbers and back suction angle. Dynamic display the working status, filling data, setting parameters and system configuration in the same screen. Intelligent calibration and online micro adjusting function. The system can connect with foot pedal switch or receive switch signal, to achieve external control. The unique motor working status output signal, can be used for other equipments monitoring the pump filling status. Pay attention to users' experience, suitable for non-pollution, high precision fluid filling.The filling precision is 0.5%-1%.

Typical Application

- Pharmaceutical,health product filling,diagnostic reagent dispensing
- Food,beverage filling
- Cosmetic dispensing

Model Number

- DF600
- DF600 Plus
- DF600 II
- DF600 Plus II

DF600 Plus

Connected with HMI,PLC etc. industrial control system, one controller can control 4 groups total 16 filling units. It can display the details of 16 filling units in the HMI, widely used for industrial control occasion.

Features

- Accurate angle control technology, high precision filling.
- Color touch-screen control, friendly interface, dynamic display filling state, also display the filling parameter and system settings in the same screen.
- Intelligent calibration function, it will calibrate the filling volume before production to ensure the filling accuracy, help you to improve the working efficiency.
- The online calibration and micro adjusting function, more convenient to calibrate or micro adjust the filling unit during production progress. It can avoid the filling errors because of tubing fatigue and elasticity decreased.
- Extend filling units on one controller freely, save cost.
- Real-time monitor, dynamic display the results of the monitoring. With alarm function, ensure the safety in production.
- The filling system can store 60 commonly used filling modes, save users setting time, and improve working efficiency.
- Back suction angle setting avoid liquid drop off when the pump stop working.

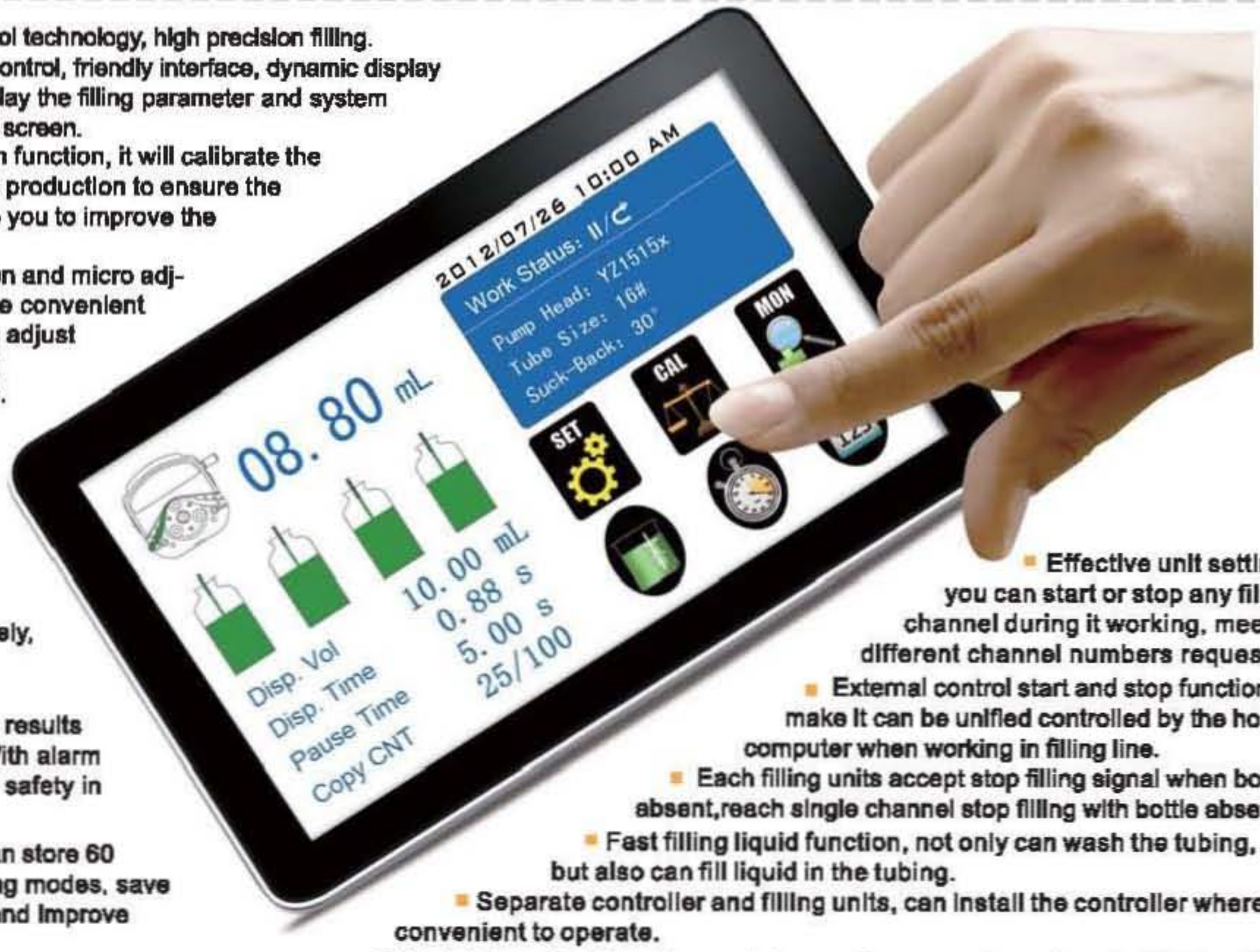

- Effective unit setting, you can start or stop any filling channel during it working, meet different channel numbers requests.
- External control start and stop function, make it can be unified controlled by the host computer when working in filling line.
- Each filling units accept stop filling signal when bottle absent,reach single channel stop filling with bottle absent.
- Fast filling liquid function, not only can wash the tubing, but also can fill liquid in the tubing.
- Separate controller and filling units, can install the controller where is convenient to operate.
- 304 stainless steel housing, resist corrosion, no rust, conform to GMP sanitary request.

CHROMalytic +61(0)3 9762 2034
TECHnology Pty Ltd
Australian Distributors
Importers & Manufacurers
www.chromtech.net.au
Website NEW : www.chromalytic.net.au E-mail : info@chromtech.net.au Tel: 03 9762 2034 . . . in AUSTRALIA

Filling System (Integrated Type)

Installation Sizes Drawing (Unit: mm)

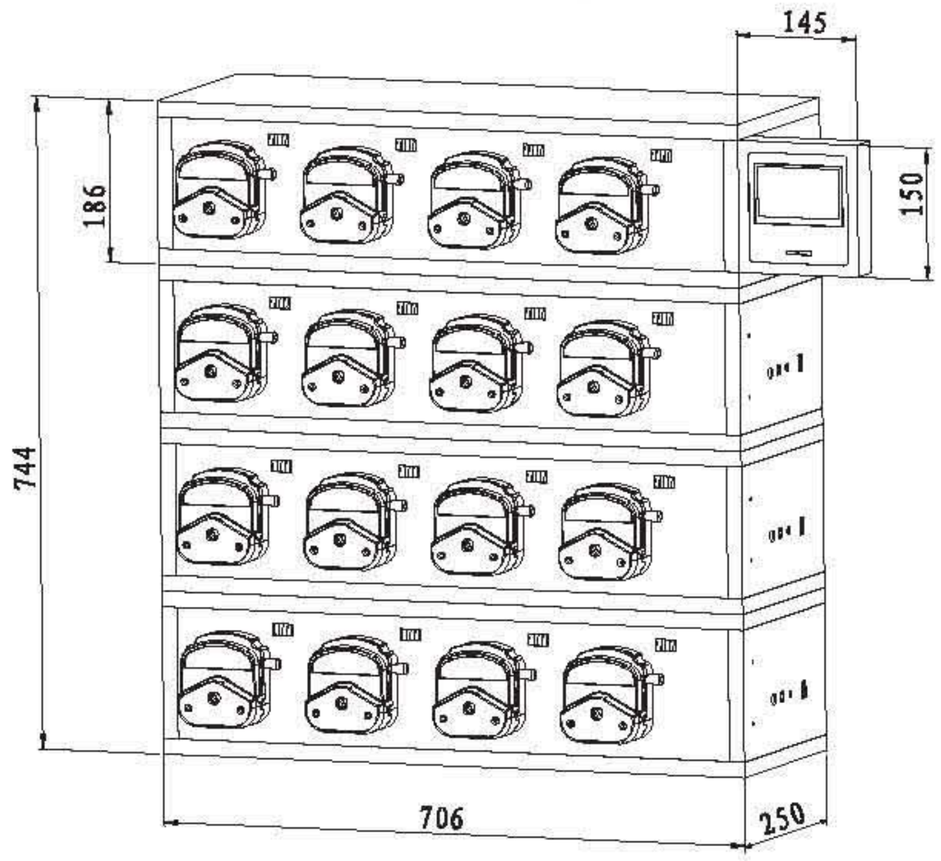

- DF600 with unique motor working status output signal,can be used for other equipments monitoring the pump filling status.
- DF600 plus use standard MODBUS communication protocol, can be connected with HMI to accomplish logical control.

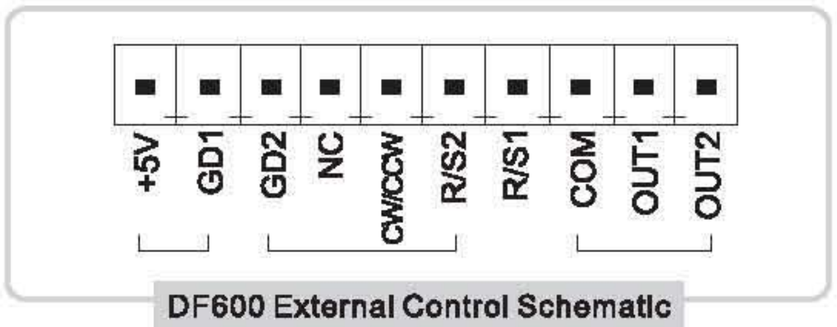

DF600 External Control Schematic

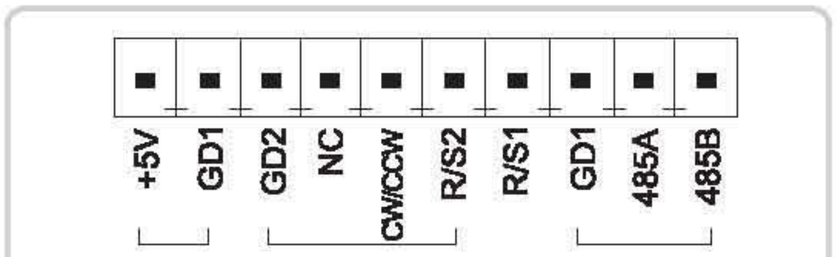

DF600 Plus External Control Schematic

Filling Volume Reference Parameter (Media is water)

Controller	Pump Head	Tubing	Filling Volume (mL)	Filling Time (s)	Accuracy (±%)	Output (pcs/min)	Motor Speed (rpm)
DF600 CF600 DF600 Plus CF600 Plus	YZ1515x YZ2515x	13#	0.1	0.5	±5ul	60	204.083
		13#	0.3	0.7	1.5	42	426.251
		13#	0.5	1	0.8	30	516.081
		13#	1	2	0.5	15	517.152
		14#	2	1	1	30	446.724
		14#	3	1.5	0.8	20	446.479
		19#	5	1.2	1	25	454.919
		16#	7	1	0.5	30	457.705
		25#/15#	10	1	1	30	303.426
		25#/15#	15	1	0.8	30	461.273
		25#/15#	20	1.2	0.5	25	518.945
		17#/24#	30	1.2	0.8	25	462.725
		17#/24#	50	2	0.5	15	461.595
		18#	80	2.5	0.5	12	427.274
		18#	100	3	0.5	10	446.583
DF600 Ⅱ CF600 Ⅱ DF600 Plus Ⅱ CF600 Plus Ⅱ	DZ25-3L	15#	16	1	0.5	40	443.540
		24#	30	1.2	0.5	35	454.877
		35#	150	4	0.5	8	447.940
		36#	200	4	0.5	8	481.802

Technical Specifications

Speed range	1–600rpm
Filling volume range	0.1–9999.99mL
Filling time range	0.5–9999.99s
Pause time range	0.5–9999.99s
Filling volume resolution	0.01mL
Time resolution	0.01s
Copy numbers	1–9999, 0 represent infinite.
Back suction angle	0–360°
Filling accuracy	< ±0.5%
Motor type	Stepper motor
Display	4.3" color display with touch screen
Operation way	Touch screen and membrane keypad
Start/stop,direction signa	Passive switch signal,such as foot pedal switch Active swith signal： 5V,12V and 24V for option
Output interface	Output motor working status (Open-Collector output)
Outlet pressure	0.1Mpa(0.86–1.0mm wall thickness tubing) 0.1–0.27Mpa(1.6–2.4mm wall thickness tubing)
Power supply	220V ± 10% 50Hz/60Hz (standard) 110V ± 10% 50Hz/60Hz (optional)
Drive dimension	DF600/DF600 Plus/DF600 Ⅱ/DF600 Plus Ⅱ: 706 × 250 × 186mm (L × W × H) CF600/CF600 Plus/CF600 Ⅱ/CF600 Plus Ⅱ: 237.4 × 152 × 158mm (L × W × H)
Power consumption	each filling unit < 50W(DF600/DF600 Plus/CF600/CF600 Plus) each filling unit < 80W(DF600 Ⅱ/DF600 Plus Ⅱ/CF600 Ⅱ/CF600 Plus Ⅱ)
Condition temperature	0–40℃
Relative humidity	< 80%
IP rate	IP31

CHROMalytic +61(0)3 9762 2034
TECHnology Pty Ltd
Australian Distributors
Importers & Manufacurers
www.chromtech.net.au
Website NEW : www.chromalytic.net.au E-mail : info@chromtech.net.au Tel: 03 9762 2034 . . . in AUSTRALIA

Filling System (Integrated Type)

Filling Volume Reference Parameter(Media is water)

Tubing	Filling Volume	Filling Time	Actual Filling Volume(mL)										Filling Accuracy	
13#	0.1mL	0.5s	0.1000	0.1017	0.1004	0.1000	0.1006	0.0986	0.1015	0.0988	0.1006	0.0991	-2.500%	1.700%
			0.0996	0.0975	0.0976	0.1006	0.0995	0.1015	0.0988	0.0991	0.0996	0.0993		
13#	0.3mL	0.7s	0.3000	0.2979	0.3013	0.2985	0.3020	0.3030	0.3023	0.2993	0.2993	0.2974	-0.867%	1.033%
			0.3010	0.3030	0.2992	0.2979	0.3004	0.3019	0.3012	0.2978	0.3031	0.3022		
13#	0.5mL	1s	0.5008	0.5034	0.4998	0.5020	0.5007	0.5038	0.5021	0.5023	0.5010	0.4995	-0.100%	0.760%
			0.5003	0.5008	0.5003	0.5011	0.5002	0.5037	0.5025	0.5005	0.5010	0.5000		
13#	1mL	2s	1.0004	1.0000	0.9990	1.0011	1.0035	1.0014	1.0014	1.0014	0.9999	1.0015	-0.370%	0.490%
			1.0013	1.0013	1.0029	1.0049	1.0016	1.0019	1.0048	0.9963	1.0038	1.0040		
14#	2mL	1s	2.0030	2.0030	2.0125	1.9861	2.0116	1.9987	1.9984	2.0143	1.9973	2.0110	-0.695%	0.765%
			2.0033	2.0153	1.9875	2.0100	2.0092	2.0024	2.0103	1.9915	2.0045	2.0133		
14#	3mL	1.5s	3.0147	2.9861	3.0125	2.9897	3.0037	2.9905	3.0063	2.9850	3.0038	2.9917	-0.500%	0.493%
			3.0088	3.0000	3.0019	3.0138	2.9896	3.0148	2.9921	3.0128	2.9905	3.0059		
19#	5mL	1.2s	4.9933	5.0069	4.9914	4.9540	5.0068	4.9957	4.9950	5.0029	4.9963	4.9571	-0.920%	0.500%
			4.9838	5.0208	5.0031	4.9687	5.0237	4.9841	5.0239	5.0032	4.9584	5.0250		
16#	7mL	1s	7.0184	7.0197	7.0178	7.0120	7.0242	7.0132	7.0149	7.0213	7.0093	7.0215	-0.293%	0.346%
			6.9795	6.9834	6.9946	6.9975	6.9868	7.0133	7.0195	7.0121	7.0190	7.0125		
25#/15#	10mL	1s	9.9400	10.0300	10.0700	10.0200	10.0000	9.9800	9.9200	10.0400	10.0600	10.0400	-0.800%	0.700%
			10.0400	10.0500	10.0200	9.9700	9.9500	10.0200	10.0600	10.0400	10.0500	9.9600		
25#/15#	15mL	1s	15.0000	15.0000	15.0300	14.9900	15.0400	15.0400	15.0300	15.0700	14.9000	15.0100	-0.667%	0.467%
			14.9500	15.0300	15.0300	15.0600	15.0300	14.9900	15.0300	14.9400	15.0100	15.0000		
25#/15#	20mL	1.2s	19.9600	19.9400	20.0600	19.9900	19.9600	19.9200	19.9700	20.0400	20.0000	20.0000	-0.450%	0.500%
			19.9300	20.1000	20.0000	19.9100	20.0200	20.1000	20.0100	19.9700	19.9900	20.0900		
17#/24#	30mL	1.2s	29.9100	29.9900	30.1800	30.1000	29.9700	29.9700	30.1800	29.8100	30.1800	29.9500	-0.633%	0.600%
			29.9400	29.9200	29.9300	30.0100	30.1800	30.0500	29.9600	29.8800	30.0100	30.1800		
17#/24#	50mL	2s	50.0600	50.0400	49.9900	49.8500	50.0800	50.1100	49.9800	49.8700	49.9200	50.1200	-0.440%	0.240%
			49.9200	50.0000	49.9900	49.7800	49.8200	49.9100	50.0500	49.9300	49.8400	49.8400		
18#	80mL	2.5s	79.9700	80.2200	80.2800	80.1100	80.0000	79.9000	79.9200	80.2900	80.1300	80.0300	-0.325%	0.363%
			79.7400	79.7800	79.8000	80.0100	80.1700	79.8500	79.7600	79.8500	80.0300	80.2200		
18#	100mL	3s	99.8300	100.3500	99.9700	100.3700	100.0900	100.2600	100.0800	100.1500	100.1600	99.8900	-0.430%	0.370%
			100.0400	99.6600	100.0800	99.5700	100.0100	99.9900	99.7900	100.1400	99.7200	100.1700		
35#	150mL	4s	149.4100	150.4300	149.7600	150.0400	150.4200	149.5500	150.3200	149.7500	149.6500	150.2900	-0.480%	0.287%
			149.4200	149.9400	150.2700	149.3400	149.8600	150.2500	149.2800	150.0300	149.9200	149.4700		
36#	200mL	4s	199.4800	199.9000	199.6600	199.7200	199.8600	200.0200	199.2000	199.8800	199.8600	199.4800	-0.400%	0.300%
			199.9000	200.5400	200.6000	199.9600	199.9400	200.0200	199.9800	200.0600	199.9200	200.1800		

CHROMalytic +61(0)3 9762 2034
TECHnology Pty Ltd
Australian Distributors
Importers & Manufacurers
www.chromtech.net.au
Website NEW : www.chromalytic.net.au E-mail : info@chromtech.net.au Tel: 03 9762 2034 . . . in AUSTRALIA

Filling System (Integrated Type)

CF350 (servo control)

Servo Motor Drive

Touch screen control, Dynamic display

Software Copyright shenchen

CE

Product Introduction

CF350 servo control series is split type intelligent filling system with high precision and low pulsation driven by servo motor. It is composed by one control unit and several independent filling units, can arbitrarily add or minus the number of filling units, or finish the same filling request at different place, according to customers' request in different period. One control unit can control 16 independent filling units at the same time. This system use imported 4.3" industrial grade true color display with touch screen control, can preset filling volume, filling time, pause time, copy numbers and back-suction angle, animation display working status, filling data, setting parameter, system configuration display at the same screen; with intelligent calibration and online micro-adjust function. Can connect foot pedal and receive switch signal, realize long-distance control. With motor working status output signal, can let other equipment real-time monitor the current filling status of peristaltic pump. This filling system use servo motor, and high precision, low pulsation pump head to make the filling precision higher, up to 0.1%-0.6%, make the micro volume and big volume high precision filling come true.

control unit

filling unit

Features

- **Servo motor drive, precision control.**
- **Split type design, space-saving, easy installation.**
- **Imported 4.3" industrial grade true color display, clear picture quality, the quality is more guaranted. Animation display current filling status, display filling volume, filling time, pause time, copy numbers and system configuration at the same screen.**
- **Imported touch screen control, high hardness, scratch resistance, high sensitivity, pay more attention to users' experience.**
- **Shenchen-CF-CIR electrical system all use imported chips, fast operation, high performance and work steady.**
- **Shenchen-CF-EMB operation system, use embedded software design, the function is powerful, the controllability is strong, friendly interface, pay more attention to users' experience.**
- **Shenchen-CF-EMB operation system, the core technology is precise angle control technology. Rely on this technology, the precision of this filling system reached international leading level. The filling precision is affected by various factor, expect for control technology, the physical precision of the pump head is also a factor, the two factors guarantee the high precision together.**
- **The CF350 dispensing system uses the specially designed "Low Pulsation" pump head for high precision filling. Through the phase difference between the two sets of rollers, makes the fluid peaks and valleys complementary, then reduce the pulsation of the fluid. Adaptive pressure tubing space, extend the tube lifetime effectively, actually achieves micro flow rate and large flow rate high precision dispensing.**
- **With the intelligent calibration function, the flow and distribution of the amount of liquid can be calibrated to ensure the flow accuracy, suitable for high precision liquid transferring.**
- **External control start/stop function, can connect to foot pedal switch, and realize upper computer unified control or receive stop filling signal when bottle absent when supporting filling production line.**

Model Number

- **CF350**
- **CF350 Plus**
- **CF600Ⅲ**
- **CF600 PlusⅢ**
- **CF600Ⅳ**
- **CF600 PlusⅣ**

Installation Sizes Drawing (Unit: mm)

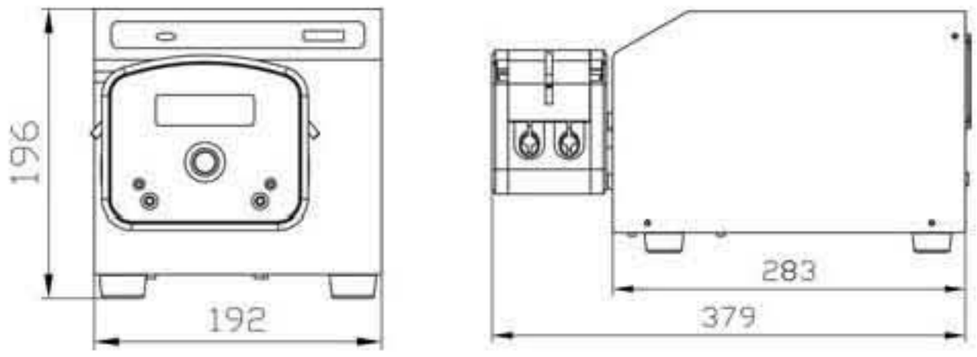

Drive Dimension Drawing

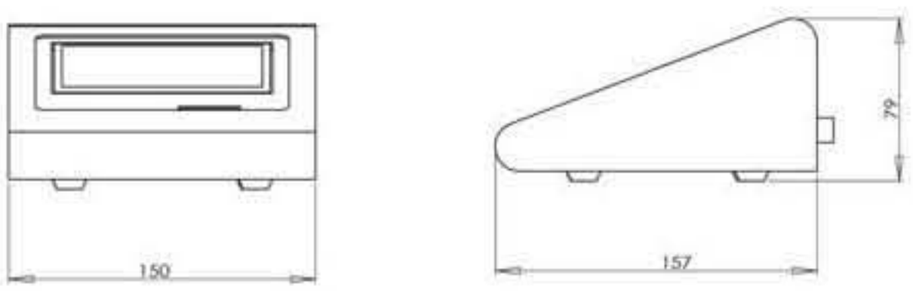

Controller Dimension Drawing

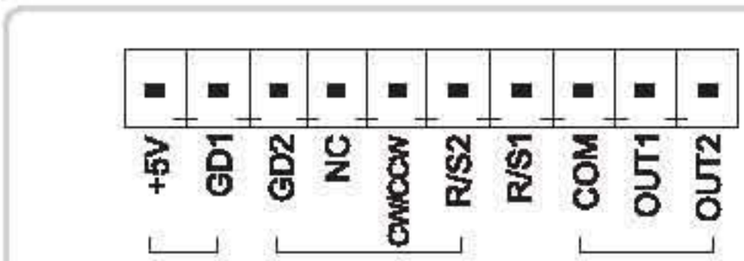

CF servo control filling series external control schematic diagram

CHROMalytic +61(0)3 9762 2034
TECHnology Pty Ltd
Australian Distributors
Importers & Manufacurers
www.chromtech.net.au
Website NEW : www.chromalytic.net.au E-mail : info@chromtech.net.au Tel: 03 9762 2034 . . . in AUSTRALIA

Filling System (Integrated Type)

DF600Ⅳ (servo control)

Product Introduction

DF servo control series is split type intelligent filling system with high precision and low pulsation driven by servo motor. It is composed by control unit and integrated type filling units, each group have 4 filling units, total 16 filling units. This system use imported 4.3" industrial grade true color display with touch screen control, can preset filling volume, filling time, pause time, copy numbers and back-suction angle, animation display working status, filling data, setting parameter, system configuration display at the same screen; with intelligent calibration and online micro-adjust function. Can connect foot pedal and receive switch signal, realize long-distance control. With motor working status output signal, can let other equipment real-time monitor the current filling status of peristaltic pump. This filling system use servo motor, and high precision, low pulsation pump head to make the filling precision higher, up to 0.1%-0.6%, make the micro volume and big volume high precision filling come true.

DF350 (servo control)

Typical Application

- Medicine, health care products filling Diagnostic reagents filling
- Food, beverage filling Cosmetic filling

Model Number

- DF350 DF350 Plus DF600Ⅲ
- DF600 PlusⅢ DF600Ⅳ DF600 PlusⅣ

Features

- Servo motor drive, precision control.
- Imported 4.3" industrial grade true color display, clear picture quality, the quality is more guaranted. Animation display current filling status, display filling volume, filling time, pause time, copy numbers and system configuration at the same screen.
- Imported touch screen control, high hardness, scratch resistance, high sensitivity, pay more attention to users' experience.
- Shenchen-DF-CIR electrical system all use imported chips, fast operation, high performance and work steady.
- Shenchen-DF-EMB operation system, use embedded software design, the function is powerful, the controllability is strong, friendly interface, pay more attention to users' experience.
- Shenchen-DF-EMBShenchen-CF-EMB operation system, the core technology is precise angle control technology. Rely on this technology, the precision of this filling system reached international leading level. The filling precision is affected by various factor, expect for control technology, the physical precision of the pump head is also a factor, the two factors guarantee the high precision together.
- The DF servo control filling system uses the specially designed "Low Pulsation" pump head for high precision filling. Through the phase difference between the two sets of rollers, makes the fluid peaks and valleys complementary, then reduce the pulsation of the fluid. Adaptive pressure tubing space, extend the tube lifetime effectively, actually achieves micro flow rate and large flow rate high precision dispensing.
- With the intelligent calibration function, the flow and distribution of the amount of liquid can be calibrated to ensure the flow accuracy, suitable for high precision liquid transferring.
- It has micro adjusting function. During production process, when the tube fatigue or elasticity decreased, the micro adjusting function can micro adjust the flow rate and avoid the error without the pump stopping.
- The filling system can store 60 commonly used filling modes, save users setting time, and improve working efficiency.

CHROMalytic +61(0)3 9762 2034
TECHnology Pty Ltd
Australian Distributors
Importers & Manufacurers
www.chromtech.net.au
Website NEW : www.chromalytic.net.au E-mail : info@chromtech.net.au Tel: 03 9762 2034 . . . in AUSTRALIA
-High quality.

Filling System (Integrated Type)

- Back suction angle setting, avoid liquid drop off when the pump stop working.
- Effective unit setting, you can start or stop any filling channel during working, meet different channel numbers request.
- Can arbitrarily add filling units, one control unit can simultaneously control 16 independent filling units. Each filling unit receive stop filling signal when bottle absent, so single channel can stop filling when bottle absent.
- Separate controller and filling units, can install the controller where is convenient to operate.
- Each filling unit use high definition LCD screen, display address number and working status.
  External control start/stop function, can connect to foot pedal switch, and realize upper computer unified control or receive stop filling signal when bottle absent when supporting filling production line.
- Load-shedding memory function, store the running parameters in time, safe and reliable.
- Fast filling function, not only can be used for washing the tube, but also can fill liquid to the tubing fast.
- Strong anti-jamming feature, wide voltage design, suitable for complex power supply environment.
- Circuit board spray with three paint, anti-dust, anti-moisture, anti-static, resist corrosion.
- 304 stainless steel housing, conform to GMP sanitary request. Meantime, use seamless welding technology, avoid accidental spilled liquid on the housing infiltrate inside, to protect the inside circuit board.

Technical Specifications

Speed range	CF350/DF350	1–350rpm
	CF350 Plus/DF350 Plus	1–350rpm
	CF600Ⅲ/DF600Ⅲ/DF600Ⅳ	1–600rpm
	CF600 PlusⅢ/DF600 PlusⅢ/DF600 PlusⅣ	1–600rpm
Filling volume range	0.1–9999.99 mL	
Filling time range	0.5–9999.99 s	
Pause time range	0.5–9999.99 s	
Filling volume resolution	0.01 mL	
Time resolution	0.01 s	
Copy numbers	1–9999, 0 represent infinite	
Back suction angle	0–360°	
Filling accuracy	< ± 0.5%	
Motor type	CF servo control series	Servo motor
	DF servo control series	Servo motor
Circuit system	Shenchen–DF–CIR/Shenchen–CF–CIR	
Control system	Shenchen–DF–EMB/Shenchen–CF–EMB	
Display	4.3" industrial grade true color LCD screen	
Control method	Touch screen and membrane keypad	
Start/stop,change	Passive switch signal, such as foot pedal.	
	Active switch signal: 5V, 12V, 24V for option	
Output interface	Output motor working status(Open–collector output	
Power supply	AC 220V ± 10% 50Hz/60Hz (standard)	
	AC 110V ± 10% 50Hz/60Hz (standard)	
Drive dimension (L×W×H)	CF350/CF350 Plus : 283×192×196mm	
	CF600Ⅲ/CF600 PlusⅢ : 283×192×196mm	
	DF350/DF350 Plus : 910×290×212mm	
	DF600Ⅲ/CF600 PlusⅢ : 910×290×212mm	
	DF600Ⅳ/DF600 PlusⅣ: 1056×310×248mm	
Weight	CF350/CF350 Plus : 7.8 kg	
	CF600Ⅲ/CF600 PlusⅢ : 7.8 kg	
	DF350/DF350 Plus : 41.45 kg	
	DF600Ⅲ/CF600 PlusⅢ : 41.45 kg	
	DF600Ⅳ/DF600 PlusⅣ: 58.6 kg	
Power consumption	each filling unit < 180W (CF350/CF350 Plus/CF600Ⅲ/ CF600 PlusⅢ/DF350/DF350 Plus/DF600Ⅳ/DF600 PlusⅣ)	
	each filling unit＜300W(CF600Ⅳ/CF600 PlusⅣ/ DF600Ⅳ/DF600 PlusⅣ)	
Condition temperature	0–40℃	
Relative humidity	< 80%	
IP rate	IP31	

Installation Sizes Drawing (Unit: mm)

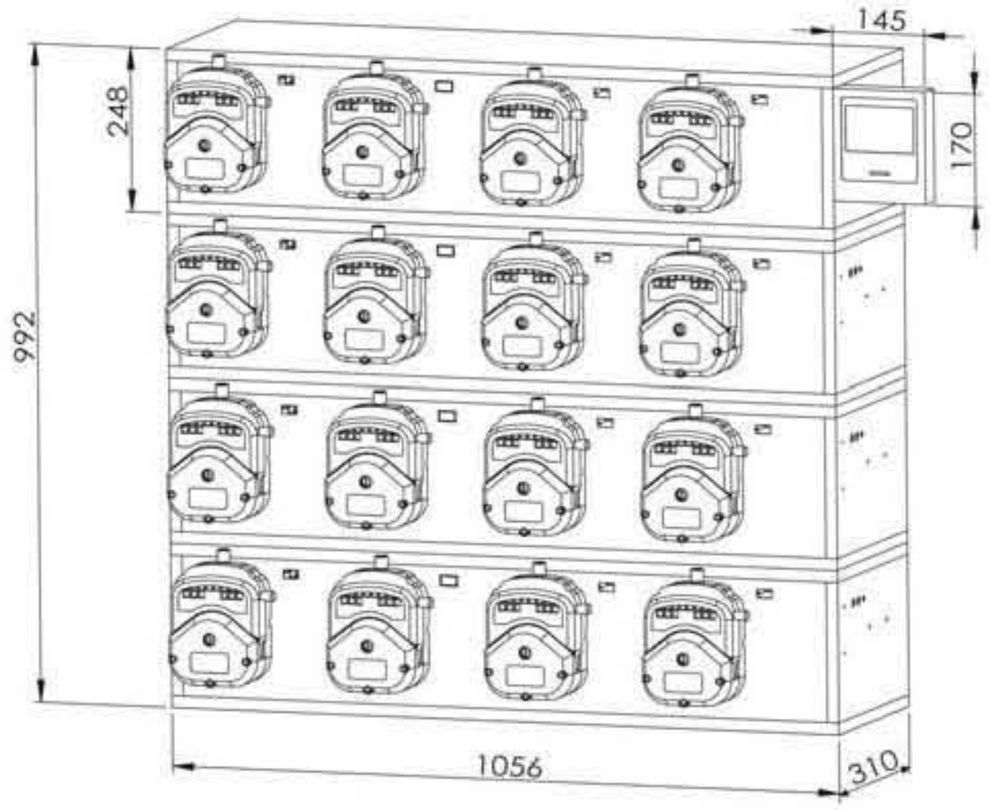

Df600 IV Dimension Drawing

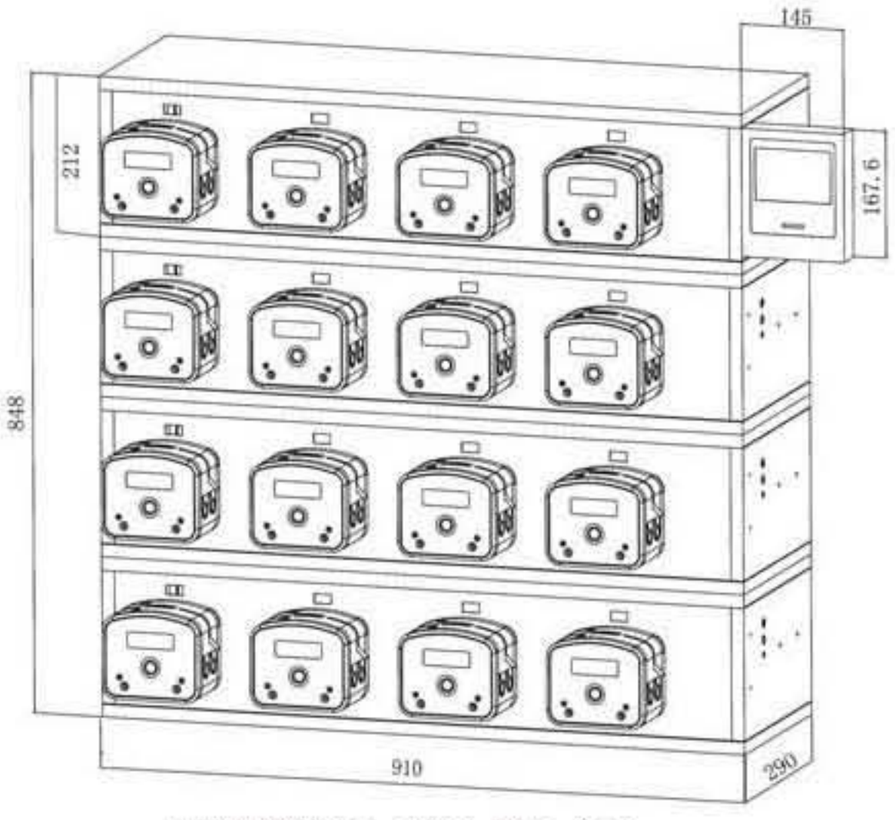

DF350Dimension Drawing

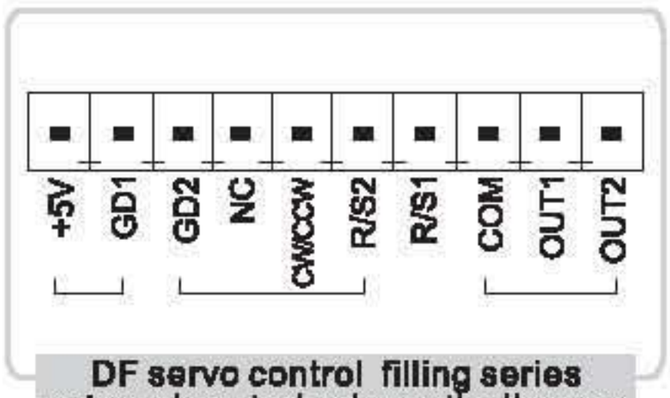

DF servo control filling series external control schematic diagram

CHROMalytic +61(0)3 9762 2034
TECHnology Pty Ltd
Australian Distributors
Importers & Manufacurers
www.chromtech.net.au
Website NEW : www.chromalytic.net.au E-mail : info@chromtech.net.au Tel: 03 9762 2034 . . . in AUSTRALIA

Filling System (Integrated Type)

Product Composition and Flow Rate Range

Drive	Model	The shell material	Tubing clamp/tubing connector material	Tubing		(Speed0.1~350rpm) Flow Rate Range mL/min
				Size	ID × Wall(mm)	
DF350 CF350 DF350 Plus CF350 Plus	DY15	Aluminum alloy	PP	13#	0.8×1.6	0.01~48
				14#	1.6×1.6	0.06~223
				19#	2.4×1.6	0.13~448
				16#	3.1×1.6	0.2~723
				25#	4.8×1.6	0.47~1626
				17#	6.4×1.6	0.64~2230
				18#	7.9×1.6	0.95~3337
	DY25	Aluminum alloy	PP	15#	4.8×2.4	0.42~1480
				24#	6.4×2.4	0.76~2670
				35#	7.9×2.4	1~3600
				36#	9.6×2.4	1.24~4340

Drive	Model	The shell material	Tubing clamp/tubing connector material	Tubing		(Speed0.1~600rpm) Flow Rate Range mL/min
				Size	ID × Wall(mm)	
DF600Ⅲ CF600Ⅲ DF600 PlusⅢ CF600 PlusⅢ	DZ25-6L	Aluminum alloy	PP	15#	4.8×2.4	0.42~1480
				24#	6.4×2.4	0.76~2670
				35#	7.9×2.4	1~3600
				36#	9.6×2.4	1.24~4340
DF600Ⅳ CF600Ⅳ DF600 PlusⅣ CF600 PlusⅣ	YZ35-PPS	PPS	PP	26#	6.4×3.3	0.69~4200
				73#	9.6×3.3	1.23~7400
				82#	12.7×3.3	2~12000

Filling Volume Reference Parameter(Media is water)

Drive	Pump Head	Tubing	Filling Volume (mL)	Filling Time (s)	Filling Accuracy (±%)	Output (pcs/min)
DF350 CF350 DF350 Plus CF350 Plus	DY15	14#	0.5	0.5	0.3	60
		14#	1	1	0.4	30
		14#	2	1	0.6	30
		19#	3	1	0.3	30
		16#	5	1	0.5	30
		25#	10	1	0.3	30
		25#	15	1	0.4	30
		17#	30	1	0.4	30
		18#	100	2.5	0.3	12
	DY25	15#	10	1	0.3	30
		24#	30	1	0.5	30
		35#	70	1.2	0.4	25
		36#	100	2	0.2	15
DF600Ⅲ CF600Ⅲ DF600 PlusⅢ CF600 PlusⅢ	DZ25-6L	15#	80	4	0.4	13
		24#	150	4	0.4	13
		35#	200	3.2	0.5	8
		36#	300	3.5	0.5	8
DF600Ⅳ CF600Ⅳ DF600 PlusⅣ CF600 PlusⅣ	YZ35-PPS	24#	150	3	0.5	10
		35#	300	3	0.5	10
		36#	500	3	0.5	10

CHROMalytic +61(0)3 9762 2034
TECHnology Pty Ltd
Australian Distributors
Importers & Manufacurers
www.chromtech.net.au
Website NEW : www.chromalytic.net.au E-mail : info@chromtech.net.au Tel: 03 9762 2034 . . . in AUSTRALIA

Filling System (Integrated Type)

Filling Volume Reference Parameter(Media is water)

	Tubing	Filling Volume	Filling Time	Actual Filling Volume(mL)										Filling Accuracy	
DY15	14"	0.5mL	0.5s	0.5003	0.5010	0.4982	0.5015	0.5015	0.5010	0.5014	0.5005	0.4981	0.4998	-0.37%	0.32%
				0.5025	0.4983	0.5024	0.5021	0.5020	0.5004	0.5005	0.4987	0.4977	0.5008		
	14"	1mL	1s	1.0037	1.0000	1.0026	1.0003	1.0031	1.0015	1.0000	1.0007	1.0023	1.0035	-0.44%	0.42%
				1.0002	1.0020	0.9968	1.0010	0.9986	1.0026	1.0030	1.0029	1.0023	1.0017		
	14"	2mL	1s	2.0020	2.0060	2.0039	2.0037	2.0047	1.9944	2.0062	2.0040	1.9951	2.0060	-0.58%	0.60%
				2.0036	1.9940	2.0024	2.0086	1.9946	2.0005	1.9951	2.0068	1.9971	1.9965		
	19"	3mL	1s	3.0058	2.9935	3.0092	3.0008	2.9927	3.0072	3.0046	2.9914	3.0040	3.0000	-0.33%	0.31%
				2.9902	3.0048	3.0008	2.9919	2.9984	3.0012	3.0084	2.9915	2.9980	3.0051		
	16"	5mL	1s	5.0215	4.9982	5.0145	5.0038	4.9864	5.0183	4.9962	5.0227	5.0158	4.9806	-0.39%	0.50%
				5.0248	5.0070	4.9861	5.0108	4.9995	5.0080	5.0044	4.9868	5.0231	4.9977		
	25"	10mL	1s	10.02	10.04	10.00	9.98	10.02	10.03	10.04	10.04	10.01	9.98	-0.20%	0.40%
				10.00	10.02	10.02	10.04	9.99	9.98	10.00	10.04	10.02	10.03		
	25"	15mL	1s	15.02	14.97	14.97	14.94	15.00	15.00	14.94	14.95	14.96	14.99	-0.47%	0.13%
				14.96	14.85	14.96	14.99	14.98	14.84	14.93	14.93	14.98	14.96		
	17"	30mL	1s	29.92	30.01	29.99	29.91	29.83	29.86	29.91	29.91	29.91	29.89	-0.57%	0.20%
				29.88	29.96	30.03	30.06	30.02	30.02	30.06	29.96	29.96	29.83		
	18"	100mL	2.5s	99.80	99.80	99.80	99.90	100.00	100.10	100.10	100.00	100.10	100.00	-0.20%	0.30%
				99.80	100.00	100.10	100.20	99.90	100.10	100.00	100.30	100.10	100.10		
DY25	15"	10mL	1s	9.97	10.01	9.96	9.98	10.01	9.96	9.97	9.99	9.96	9.96	-0.60%	0.10%
				10.00	9.94	9.97	10.00	9.98	9.97	10.00	10.00	10.01	9.97		
	24"	30mL	1s	29.90	29.80	30.10	29.90	29.90	30.00	29.90	29.90	30.00	29.90	-0.67%	0.33%
				29.90	29.90	29.90	29.90	29.90	29.80	30.00	29.90	29.90	30.00		
	35"	70mL	1.2s	69.80	69.90	69.90	69.90	69.70	70.10	70.00	69.70	69.90	69.90	-0.43%	0.43%
				69.90	70.10	70.00	69.90	70.30	69.70	70.10	69.70	69.70	69.90		
	36"	100mL	2s	99.80	99.80	99.80	99.80	100.00	99.80	99.90	99.90	99.90	99.90	-0.20%	0.10%
				99.80	99.90	99.90	99.90	100.00	100.10	99.80	100.10	99.90	99.90		
DZ25-6L	15"	80mL	4s	80.2	80.0	80.3	80.2	80.1	80.1	80.2	80.1	80.2	80.1	-0.13%	0.38%
				80.1	79.9	80.1	79.9	80.0	80.1	19.9	80.1	80.1	80.0		
	24"	150mL	4s	149.9	150.2	150.0	150.1	150.0	150.3	150.0	150.1	150.3	150.0	-0.07%	0.20%
				149.9	150.1	150.0	150.0	150.1	150.0	150.1	149.9	150.2	150.2		
	35"	200mL	3.5s	199.7	199.9	200.2	200.2	200.2	199.6	199.8	199.8	200.1	199.9	-0.40%	0.10%
				199.5	199.2	199.5	199.9	199.5	199.3	199.8	199.3	199.5	199.9		
	36"	300mL	3.5s	300.4	300.1	300.3	300.3	300.4	300.1	300.3	300.4	300.8	300.2	-0.17%	0.20%
				300.2	300.0	300.1	300.2	300.2	299.9	299.5	300.5	300.5	300.6		
YZ35-PPS	26"	150mL	3s	149.3	150.3	149.6	150.2	150.5	150.1	150.5	150.1	150.5	150.0	-0.47%	0.33%
				150.4	149.9	150.4	150.0	150.3	149.8	150.3	149.9	150.4	150.0		
	73"	300mL	3s	299.9	299.8	300.0	300.1	300.4	300.2	300.4	300.4	300.8	300.5	-0.07%	0.27%
				300.8	300.6	300.5	300.5	300.5	300.6	300.7	300.5	300.5	300.6		
	82"	500mL	3s	500.0	497.8	499.7	498.3	498.4	499.5	498.2	499.7	499.2	498.4	-0.44%	0.38%
				499.5	498.3	501.5	501.9	500.0	501.8	501.1	500.5	501.6	499.6		

CHROMalytic +61(0)3 9762 2034
TECHnology Pty Ltd
Australian Distributors
Importers & Manufacurers
www.chromtech.net.au
Website NEW : www.chromalytic.net.au E-mail : info@chromtech.net.au Tel: 03 9762 2034 . . . in AUSTRALIA

SHENCHEN
Standard Peristaltic Pump

LabN1

A
ABS engineering plastic housing
LabN Series

ABS engineering plastic housing

LabN1/LabN3/LabN6

Installation Sizes Drawing (Unit: mm)

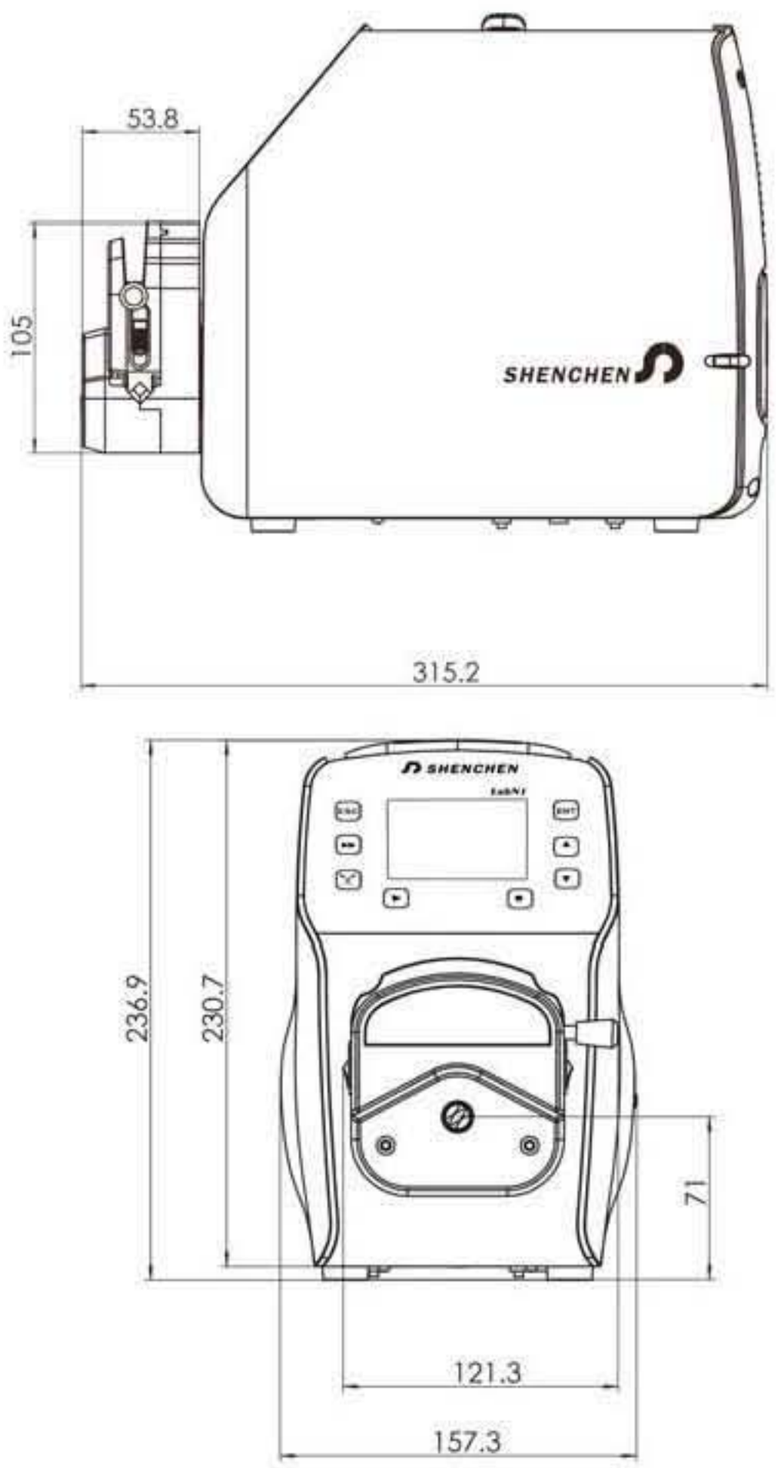

Product Introduction

The second generation standard type peristaltic pump, with ABS engineering plastic housing, streamlined body design, more fashion sense. 3.2" blue LCD screen, touch keypad control, feel comfortable. Speed range: 0.1-600 rpm, suitable for various pump heads. Flow rate range: 0.1-2280ml/min. Multiple external control for selection. Support RS232/RS485 communication, standard MODBUS protocol (RTU mode), meeting different industrial sites equipment request.

Suitable Pump Head

Multichannel Pump Head (MC1-MC12)

Easy Load Pump Head (YZ1515x、YZ2515x)

Multichannel Pump Head (DG1~DG12)

Fast Load Pump Head (DZ25-3L)

Standard Pump Head (SN15、SN25)

Typical Application

- Special for university laboratory and research institute
- Ion chromatography and titrator
- Pilot scale and industry production

Features

- Friendly interface, 3.2" big screen LCD display working parameters in real time.
- Super silent drive setting, precise control, low vibration and low noise.
- Shenchen-Nx-CIR circuit system, use imported chips, computing speed fast, reliable performance, working stable.
- Shenchen-Nx-EMB operating system, using the embedded software design, powerful function, friendly interface, strong control, pay attention to the user experience..
- Touch keypad control, menu interface, convenient for users setting the parameters.
- Timing function, the time range is 0.1s-9999 hours, can be used for simple dispensing function.
- 0-360° back suction angle setting, can avoid the fluid drop off when transferring viscous fluid.
- Automatical temperature control system, reduce the noise of fan effectively.
- Various external control functions, support 0-5V,0-10V,4-20mA analog signal control speed. In the mean time also have Shenchen -Nx-EMB-PGM programmable external control function, can meet special industrial control request.
- Support RS232/RS485 communication interface, MODBUS communication protocol, meet different industrial request.
- Power down memory function, store parameters in time, safe and reliable.
- Strong anti-jamming feature, wide voltage design, suitable for complex power supply environment.
- Circuit board spray with three paint, anti-dust, anti-moisture, anti-static, resist corrosion.

CHROMalytic +61(0)3 9762 2034
TECHnology Pty Ltd
Australian Distributors
Importers & Manufacurers
www.chromtech.net.au
Website NEW : www.chromalytic.net.au E-mail : info@chromtech.net.au Tel: 03 9762 2034 . . . in AUSTRALIA

Standard Peristaltic Pump

Technical Specifications

Speed range	LabN1:0.1~150 rpm
	LabN3:0.1~350 rpm
	LabN6:0.1~600 rpm
Speed resolution	0.1rpm
Back suction angle	0–360°
Testing time range	0.1s – 9999 hours
Outlet pressure	0.1Mpa (0.86–1.0mm wall thickness tubing)
	0.1–0.27Mpa (1.6–2.4mm wall thickness tubing)
Motor type	Stepper motor
Circuit system	Shenchen–Nx–CIR
Control system	Shenchen–Nx–EMB
Display	3.2 inch HD LCD screen
Control method	Touch keypad
External control speed signal	0-5V, 0-10V, 4-20mA for option
Start/stop,change direction signal	Passive switch signal, such as foot pedal switch Active switch signal: 5V,12V and 24V for option
Communication interface	RS232/RS485 support MODBUS protocol (RTU mode)
Output interface	Output motor working status (Open-Collector output)
Power supply	220V ± 10%, 50Hz/60Hz (standard), 110V ± 10%, 50Hz/60Hz (optional)
Drive dimension	261.4 x 157.3 x 230.7mm (L x W x H)
Drive weight	4.40 kg
Power consumption	<50W
Environment temperature	0–40℃
Relative humidity	<80%
IP rate	IP31

LabN series appearance features

1. Portable handheld design, feel comfortable and stable.
2. Multifunction protective cover for external control interface,can be used for tool box, install common tools.
3. Hidden external control interface, protective cover can protect the interface and data lines effectively.

LabN series with various external control

1. Analog signal input port:

A. Can choose the analog signal source according with demand: 0–5V, 0–10V, 4–20mA

- B. After choose the signal source, customer can choose the relative speed with maximum and minimum data of the signal source. In this way, to achieve custom speed range purpose.
- C. The top limit of the working speed is setting the peristaltic pump maximum working speed when the analog signal and the speed keep linear relationship. This function can avoid the peristaltic pump transferring flow rate sudden change when outside analog signal change suddenly, occur production accident.

2. Inner isolated 5VDC output.
3. External control start/stop, direction signal input port: Active signal input. Can choose switch signal according with users' equipment, high level: 5V (default), 12V, 24V.
4. R/S 1 external control start/stop signal input port: Passive signal input.
5. Motor working status output port: Output motor current working status.
6. RS232 communication port:

A. Support RS232/RS485 Interface,can choose this from the software interface.

B. Support multiple baud rate communication: 2400bps, 4800 bps, 9600bps and 19200bps, can choose this from the software interface.

C. Standard Modbus communication protocol is suitable to match with HMI, PLC and other master computer which support standard Modbus communication protocol.

LabN Series External Control Schematic

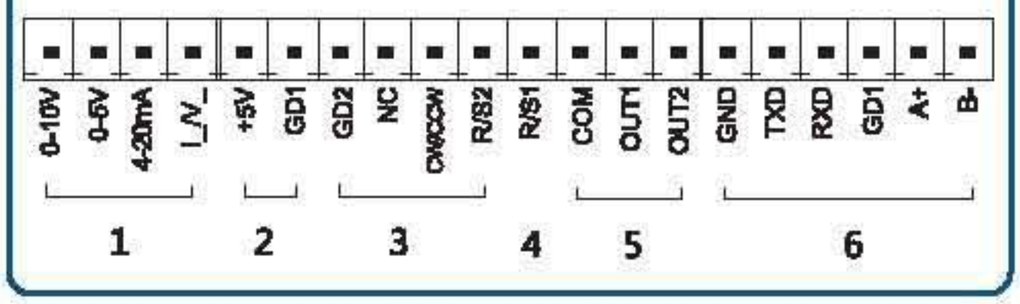

LabN1 membrane keypad

Product Composition and Flow Rate Range

Standard peristaltic pump		Pump head & Flow rates (mL/min)							
		YZ1515x	YZ2515x	MC1~MC12(10)	MC1~MC12(6)	DZ25–3L	SN25	SN15–14	SN15–16
Drive & speed \ Tubing		13#、14#、19#、16# 25#、17#、18#	15#、24#	Inner diameter: 0.13–3.17mm Wall thickness: 0.86–1mm		15#、24# 35#、36#	24#	14#	16#
LabN1	0.1–150rpm	0.007~570	0.17~435	0.000067–32(suggest working rotating speed≤150rpm)	0.00008–45(suggest working rotating speed≤150rpm)	0.211 ~ 900	0.25 ~ 375	0.024 ~ 36	0.088 ~ 132
LabN3	0.1–350rpm	0.007~1330	0.17~1015			0.211 ~ 2100	0.25 ~ 875	0.024 ~ 84	0.088 ~ 308
LabN6	0.1–600rpm	0.007~2280	0.17~1740			0.211 ~ 3600	0.25 ~ 1500	0.024 ~ 144	0.088 ~ 528

CHROMalytic TECHnology Pty Ltd +61(0)3 9762 2034
Australian Distributors
Importers & Manufacurers
www.chromtech.net.au
Website NEW : www.chromalytic.net.au E-mail : info@chromtech.net.au Tel: 03 9762 2034 . . . in AUSTRALIA

Standard Peristaltic Pump

BT300N

B
Metal spray enclosure BT-N Series

BT100N/BT300N/BT600N

Technical Specifications

Speed range	BT100N:0.5~150 rpm
	BT300N:0.5~350 rpm
	BT600N:0.5~600 rpm
Speed resolution	0.1rpm
Back suction angle	0–360°
Testing time range	0.5s – 999s
Outlet pressure	0.1Mpa (0.86–1.0mm wall thickness tubing)
	0.1–0.27Mpa (1.6–2.4mm wall thickness tubing)
Motor type	Stepper motor
Circuit system	Shenchen–Nx–CIR
Control system	Shenchen–Nx–EMB
Display	LED screen
Control method	Membrane keypad
External control speed signal	0-5V, 0-10V, 4-20mA for option
Start/stop, change direction signal	Passive switch signal, such as foot pedal switch default 24V
Communication interface	RS232/RS485 support MODBUS protocol (RTU mode)
Power supply	AC 220V ± 10%, 50Hz/60Hz (standard),
	AC 110V ± 10%, 50Hz/60Hz (optional)
Drive dimension	183 x 131x 194mm (L x W x H)
Drive weight	4.20 kg
Power consumption	< 50W
Environment temperature	0–40℃
Relative humidity	< 80%
IP rate	IP31

Product Introduction

The first generation standard type peristaltic pump with ultra quiet working performance. It is widely used in laboratory and complete analytical instruments.

Suitable Pump Head

Multichannel Pump Head (MC1-MC12)

Easy Load Pump Head (YZ1515x、YZ2515x)

Multichannel Pump Head (DG1~DG12)

Standard Pump Head (SN15、SN25)

Typical Application

- Special for university laboratory and research institute
- Ion chromatography and titrator
- Pilot scale and industry production

RS232/RS485 communication interface

Support Shenchen communication protocol or standard MODBUS communication protocol.(RTU mode)

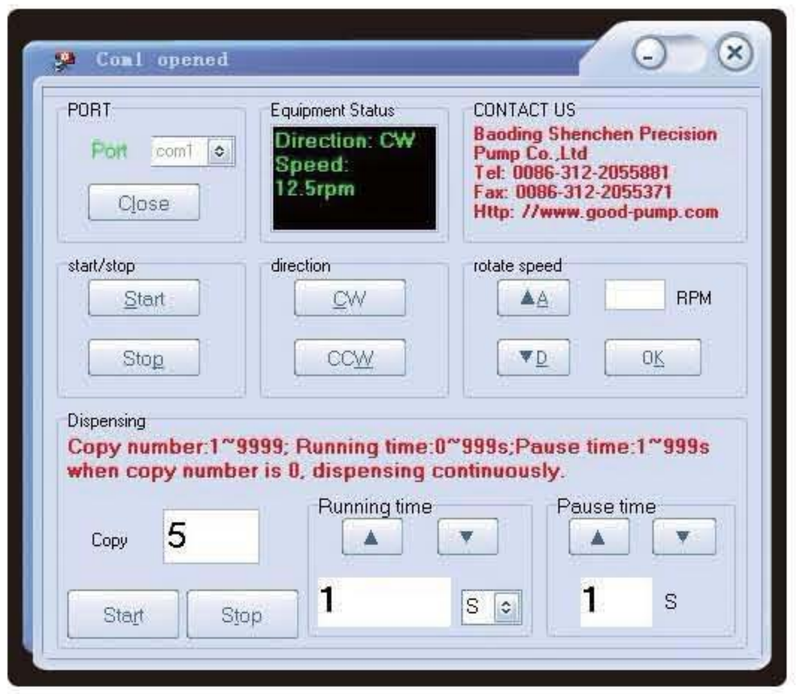

RS232 debug software

The peristaltic pump has a RS232 port, to control start/stop, reverse, speed control, and for dispensing, filling function. According to the request of remote control, it can be getting real-time feedback of the pump filling status.

Product Composition and Flow Rate Range

Standard peristaltic pump		Pump head & Flow rates (mL/min)						
		YZ1515x	YZ2515x	MC1~MC12(10)	MC1~MC12(6)	SN25	SN15–14	SN15–16
Drive & speed \ Tubing		13#、14#、19#、16# 25#、17#、18#	15#、24#	Inner diameter: 0.13–3.17mm Wall thickness: 0.86–1mm		24#	14#	16#
BT100N	0.5–150rpm	0.035~570	0.85~435	0.00034–32(suggest working rotating speed≤150rpm)	0.0004–45(suggest working rotating speed≤150rpm)	1.25 ~ 375	0.12 ~ 36	0.44 ~ 132
BT300N	0.5–350rpm	0.035~1330	0.85~1015			1.25 ~ 875	0.12 ~ 84	0.44 ~ 308
BT600N	0.5–600rpm	0.035~2280	0.85~1740			1.25 ~ 1500	0.12 ~ 144	0.44 ~ 528

CHROMalytic +61(0)3 9762 2034
TECHnology Pty Ltd
Australian Distributors
Importers & Manufacurers
www.chromtech.net.au
Website NEW : www.chromalytic.net.au E-mail : info@chromtech.net.au Tel: 03 9762 2034 . . . in AUSTRALIA

Standard Peristaltic Pump

PPS material pump head or Aluminum alloy pump head and stainless steel drive housing

N6-12L/YZ35、N6-6L/DZ25-6L、N6-3L/DZ25-3L

Product Introduction

Servo motor drive standard type industrial peristaltic pump. Speed range: 0.1-600 rpm, flow rate range: 0.211-12000mL/min. Membrane keypad control start/stop, direction, timing test and external control selection. Rotary encoded switch control the speed, easy operation. 8 different external control ways with RS232/RS485 communication interface (MODBUS protocol, RTU mode). The pump can be connected with computer, PLC and HMI, achieve external control. Suitable for industrial sites, large flow rate, wide range and high precision liquid transferring.

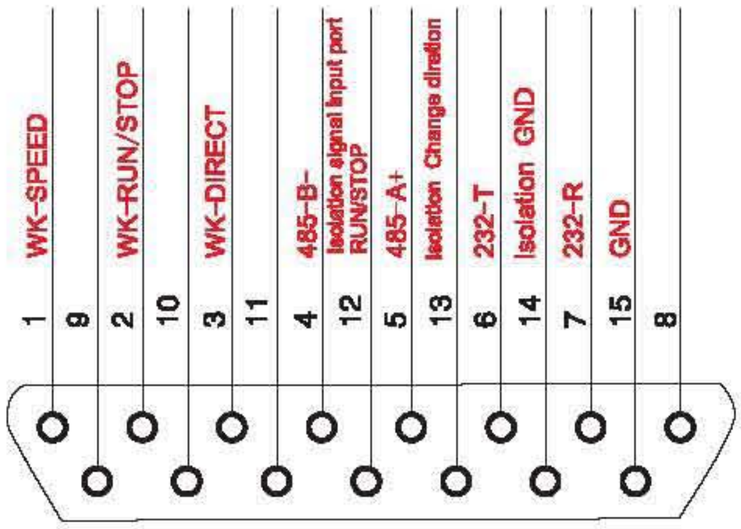

Operation Panel and External Control Schematic

CHROMalytic TECHnology Pty Ltd +61(0)3 9762 2034
Australian Distributors
Importers & Manufacurers
www.chromtech.net.au
Website NEW : www.chromalytic.net.au E-mail : info@chromtech.net.au Tel: 03 9762 2034 . . . in AUSTRALIA

Standard Peristaltic Pump

Features

- Servo motor drive, precise control, strong power, low vibration and low noise.
- Shenchen-N-CIR circuit system, use imported chips, computing speed fast, reliable performance, working stable.
- Shenchen-N-EMB operation system, embedded software design, powerful function, friendly interface, attention to users' experience.
- Membrane keypad control: start/stop,direction,timing test, external control mode selection.
- Rotary encoded switch can identify the target speed intelligently. When the rotation speed fast,the switch increase the adjustment range automatically. When the rotation speed slow, the switch decrease the adjustment range automatically. It is very convenient to adjust the speed. The rotary encoded switch also have full speed function, not only can be used for washing bottles, but also can be used for filling liquid to the tubing.
- Timing test function, time range is 0.5–999 seconds. Setting the test time freely, also can be used for simple dispensing.

Installation Sizes Drawing (Unit: mm)

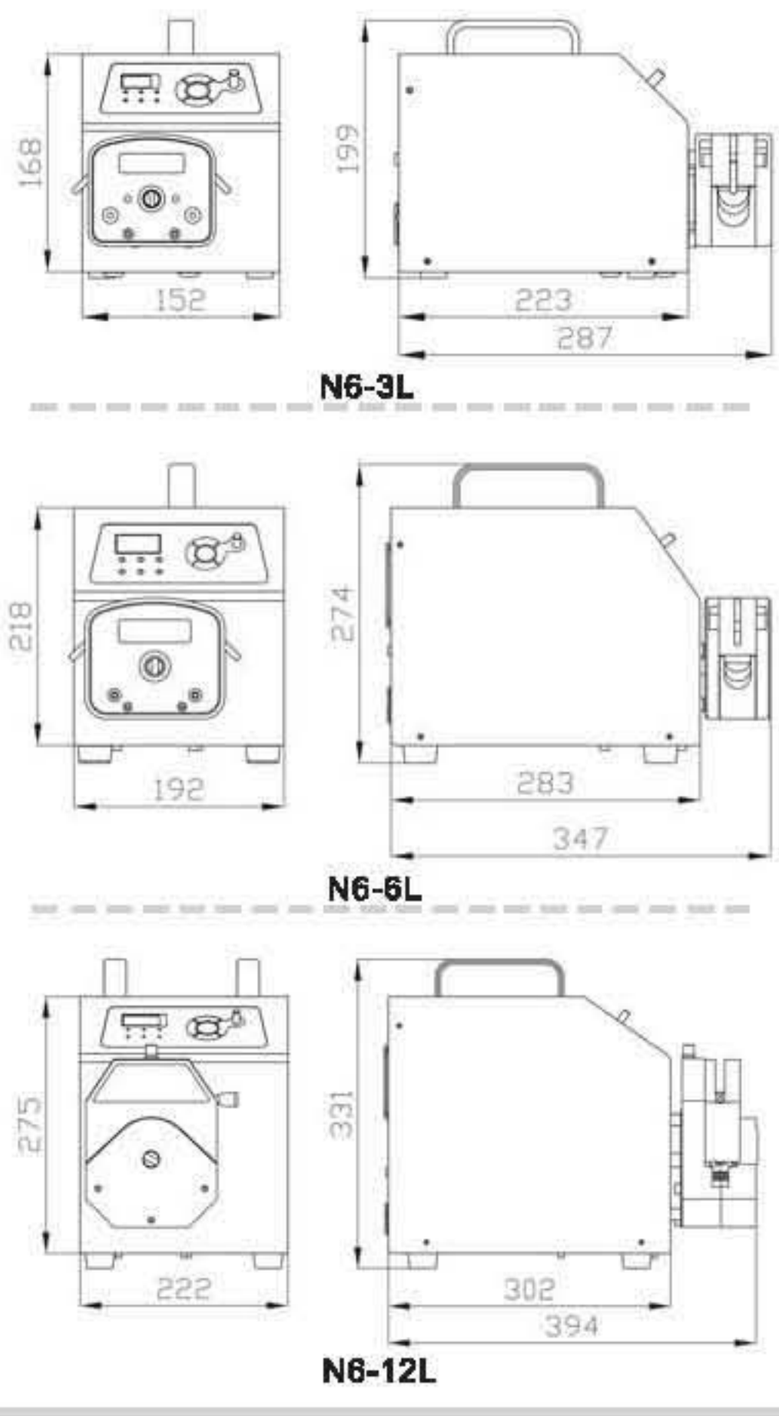

- 7 different external control ways can be selected from the panel. Analog signals (0-5V, 0-10V, 4-20mA) control speed, switch signal control start/stop and direction.

	Way1	Way2	Way3	Way4	Way5	Way6	Way7
Start/stop	●	●	●	○	○	○	●
Direction	○	●	○	●	●	○	●
Speed	○	○	●	○	●	●	●

● —External control enable ○—External control forbidden

- RS232, RS485 interface, support MODBUS protocol. Convenient for external control.
- Load-shedding memory function.
- Strong anti-jamming feature, wide voltage design, suitable for complex power supply environment.
- Circuit board spray with three paint, anti-dust, anti-moisture, anti-static, resist corrosion.
- 304 stainless steel housing, comply with pharmaceutical GMP certificate requirement. Meantime,use seamless welding technology, avoid accidental spilled liquid on the housing infiltrate inside, to protect the inside circuit board.
- DZ25-3L、DZ25-6L、YZ35-PPS or aluminum alloy pump head, 304 stainless steel rollers, strong rigidity, high accuracy, reliable performance, excellent quality.

Technical Specifications

Flow rate range	N6–3L: 0.211~3600 mL/min
	N6–6L: 0.3~6000 mL/min
	N6–12L: 0.00069~12 L/min
Speed range	0.1–600rpm
Speed resolution	0.1rpm in the range of 0-100rpm.
	1rpm in the range of 100-600rpm.
Flow rate accuracy	< ±0.5%
Output pressure	0.3Mpa
Motor type	Stepper motor/Servo motor
Circuit system	Shenchen–N–CIR
Control system	Shenchen–N–EMB
Display	3 digital LED
Control method	membrane keypad
Speed control	Rotary encoded switch
External control speed signal	0-5V (standard), 0-10V, 4-20mA (option)
Start/stop, change direction signal	Passive switch signal, such as : foot pedal. Active switch signal: 5V, 12V, 24V for option.
Communication Interface	RS232 (standard), Shenchen-N232 interface protocol ; RS485(option),Modbus protocol (RTU mode).
Power supply	AC 220V ±10%, 50Hz/60Hz (standard), AC 110V ±10%, 50Hz/60Hz (optional)
Drive dimension (L×W×H)	N6–3L: 223×152×168mm ; N6–6L: 283×192×218mm N6–12L: 302×222×275mm
Weight	N6–3L: 5.02kg; N6–6L: 7.85kg; N6–12L: 13.14kg;
Power consumption	N6–3L: <80W ; N6–6L: <180W ; N6–12L: <300W
Condition temperature	0–40℃
Relative humidity	<80%
IP rate	IP31

Product Composition and Flow Rate Range

Drive	Motor Type	Pump Head	Tubing Size	Speed Range(rpm)	Flow Rate Range(mL/min)
N6–3L	Stepper Motor/Servo Motor	DZ25–3L	15#、24#、35#、36#	0.1–600	0.211~3600
N6–6L	Servo Motor	DZ25–6L	15#、24#、35#、36#		0.3~6000
N6–12L		YZ35	26#、73#、82#		0.69~12000

CHROMalytic +61(0)3 9762 2034
TECHnology Pty Ltd
Australian Distributors
Importers & Manufacurers
www.chromtech.net.au
Website NEW : www.chromalytic.net.au E-mail : info@chromtech.net.au Tel: 03 9762 2034 . . . in AUSTRALIA

BAODING PERISTALTIC PUMP ENGINEERING TECHNOLOGY RESEARCH CENTER

New Arrivals

LabM series

ABS engineering plastic housing

LabM

RESEARCH CENTER

BAODING SHENCHEN PRECISION PUMP CO.,LTD

scan QR code

Baoding Shenchen Precision Pump Co.,Ltd

Baoding Peristaltic Pump Engineering Technology Research Center

SHENCHEN

CHROMalytic +61(0)3 9762 2034
TECHnology Pty Ltd
Australian Distributors
Importers & Manufacurers
www.chromtech.net.au
Website NEW : www.chromalytic.net.au E-mail : info@chromtech.net.au Tel: 03 9762 2034 . . . in AUSTRALIA

LabM1

NEW

A
ABS engineering plastic housing
LabM Series

ABS engineering plastic housing

LabM1/LabM3/LabM6

Installation Sizes Drawing (Unit: mm)

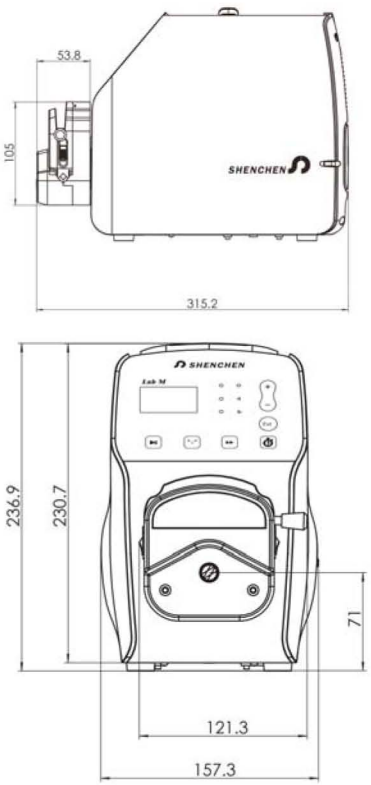

Product Introduction

The second generation basic type peristaltic pump, with ABS engineering plastic housing, streamlined body design, more fashion sense. Speed range:0.5-600rpm/min, suitable for various pump heads. Flow rate range:0.00034-3600ml/min. Membrane keypad control, multiple external control for selection. Support RS232/RS485 (standard Modbus protocol) interface, it is easy to connect with computer, PLC, HMI etc.

Features

- Touch keypad control, not only can adjust speed manually, but can also control automatically through external interface.
- Full speed button: fast filling and emptying function.
- With timed function, time range: 0.5-999s, setting test time freely, can be used for simple dispensing.
- Internal isolate external control design. External control signal have active signal and passive signal, users can use it freely.
- RS232 and RS485 interface. The pump can be controlled by PC through RS232 and serial debugging software, control the pump start/stop, direction and speed. To achieve dispensing and filling function. It also can feedback pump working status according with external control request.
- Good performance drive circuit, good cooling condition, low noise, working stable, power down memory function.
- Super strong anti-jamming feature, wide voltage design, suitable for complex power supply environment.
- Circuit board spray with three anti-paint. Anti-dust, anti-moisture, anti-static, resist corrosion.

Technical Specifications

Speed range	LabM1:0.5~150 rpm
	LabM3:0.5~350 rpm
	LabM6:0.5~600 rpm
Speed resolution	0.1rpm
Back suction angle	0–360°
Testing time range	0.5s – 999s
Outlet pressure	0.1Mpa (0.86–1.0mm wall thickness tubing)
	0.1–0.27Mpa (1.6–2.4mm wall thickness tubing)
Motor type	Stepper motor
Circuit system	Shenchen–N–CIR
Control system	Shenchen–N–EMB
Display	LED screen
Control method	Membrane keypad
External control speed signal	0-5V, 0-10V, 4-20mA for option
Start/stop, change direction signal	Passive switch signal, such as foot pedal switch default 24V
Communication interface	RS232/RS485 , MODBUS protocol (RTU mode)
Output interface	Output motor working status (Open-Collector output)
Power supply	AC 220V ± 10%, 50Hz/60Hz (standard),
	AC 110V ± 10%, 50Hz/60Hz (optional)
Drive dimension	261.4 x 157.3 x 230.7mm (L x W x H)
Drive weight	4.40 kg
Power consumption	< 50W
Environment temperature	0–40℃
Relative humidity	< 80%
IP rate	IP31

Product Composition and Flow Rate Range

Basic peristaltic pump		Pump head & Flow rates (mL/min)							
		YZ1515x	YZ2515x	MC1~MC12(10)	MC1~MC12(6)	DZ25–3L	SN25	SN15–14	SN15–16
Drive & speed / Tubing		13#、14#、19#、16# 25#、17#、18#	15#、24#	Inner diameter: 0.13–3.17mm Wall thickness: 0.86–1mm		15#、24# 35#、36#	24#	14#	16#
LabM1	0.5–150rpm	0.035~570	0.85~435	0.00034–32(suggest working rotating speed≤150rpm)	0.0004–45(suggest working rotating speed≤150rpm)	1.055 ~ 900	1.25 ~ 375	0.12 ~ 36	0.44 ~ 132
LabM3	0.5–350rpm	0.035~1330	0.85~1015			1.055 ~ 2100	1.25 ~ 875	0.12 ~ 84	0.44 ~ 308
LabM6	0.5–600rpm	0.035~2280	0.85~1740			1.055 ~ 3600	1.25 ~ 1500	0.12 ~ 144	0.44 ~ 528

HROMalytic +61(0)3 9762 2034
ECHnology Pty Ltd
Australian Distributors
Importers & Manufacurers
www.chromtech.net.au
Website NEW : www.chromalytic.net.au E-mail : info@chromtech.net.au Tel: 03 9762 2034 . . . in AUSTRALIA

Basic Peristaltic Pump

BT600M

BT100M/BT300M/BT600M

Product Introduction

Basic peristaltic pump with stepper motor driver, speed range:1-600 rpm, flow rate range: 0.00067–3600mL/min. Toggle switch control start/stop and direction. Digital knob control speed, easy operation, durable. Support external start /stop and multiple external control way. Also support RS485 Interface (MODBUS protocol RTU mode). Easy to connect with computer, PLC and HMI achieve external control. Simple and fast operation, suitable for different industrial site using.

Suitable Pump Head

Multichannel Pump Head (MC1-MC12)

Easy Load Pump Head (YZ1515x、YZ2515x)

Multichannel Pump Head (DG1~DG12)

Fast Load Pump Head (DZ25-3L)

Standard Pump Head (SN15、SN25)

Typical Application

- Add cement grinding aids
- Support center sealing machine
- Support industrial equipment

Technical Specifications

Flow rate range	BT100M: 0.00067-900 mL/min
	BT300M: 0.00067~2100 mL/min
	BT600M: 0.00067~3600 mL/min
Speed range	1–600rpm
Speed resolution	0.1rpm when the speed is 0-100rpm,
	1rpm when the speed is 100-600rpm.
Flow rate accuracy	< ±0.5%
Outlet pressure	0.1Mpa (0.86–1.0mm wall thickness tubing)
	0.1–0.27Mpa (1.6–2.4mm wall thickness tubing)
Motor type	Stepper motor
Circuit system	Shenchen-M-CIR
Operation system	Shenchen-M-EMB
Display	3 digital LED
Operation way	Toggle switch and digital knob
External control speed signal	0–5V(standard),0–10V,4-20mA (option)
Start/stop, direction signal	TTL level signal
Communication interface	RS485 (option),Modbus protocol (RTU mode)
Power supply	220V ± 10%, 50Hz/60Hz (standard),
	110V ± 10%, 50Hz/60Hz (optional)
Drive dimension (L×W×H)	BT100M: 234 × 144 × 140mm
	BT300M、BT600M: 254 × 185 × 149mm
Drive weight	BT100M: 3.6kg; BT300M:4.54kg; BT600M: 4.64kg
Power consumption	< 50W
Environment temperature	0–40℃
Relative humidity	< 80%
IP rate	IP31

Features

- 'Dual CPU' control, separate control and driver,computing fast, working stable, high precision transferring.
- Shenchen-M-CIR circuit system with imported chips, computing fast, reliable performance, working stable.
- Shenchen-M-EMB control system with embedded software design, powerful function, friendly interface, attention to users' experience.
- Digital knob can identify the target speed intelligently.When the rotation speed fast, the switch increase the adjustment range automatically.When the rotation speed slow, the switch decrease the adjustment range automatically.It is very convenient to adjust the speed.The rotary encoded switch also have full speed function, not only can be used for washing bottles,but also can be used for filling liquid to the tubing.
- Toggle switch control direction and start/stop, easy operation, long lifetime.
- Free external control module: 0-5V, 0-10V, 4-20mA, 3 kind of signal can be used for external control the pump motor speed. Also can control the pump start/stop through switch signal.
- RS485 communication interface, support Shenchen communication protocol and standard MODBUS communication protocol (RTU mode), convenient for external control.
- Power down memory function, save data in time, safe and reliable.
- Strong anti-jamming feature, wide voltage design, suitable for complex power supply environment.
- Circuit board spray with three paint,anti-dust,anti-moisture,anti-static, resist corrosion.

Product Composition and Flow Rate Range

Basic Peristaltic Pump		Pump head & Flow rates (mL/min)							
		YZ1515x	YZ2515x	MC1~MC12(10)	MC1~MC12(6)	DZ25-3L	SN25	SN15-14	SN15-16
Drive & speed / Tubing		13#、14#、19#、16# 25#、17#、18#	15#、24#	Inner diameter: 0.13–3.17mm Wall thickness: 0.86–1mm		15#、24# 35#、36#	24#	14#	16#
BT100M	1–150rpm	0.07~570	1.7~435	0.00067–32(suggest working rotating speed≤150rpm)	0.0008–45(suggest working rotating speed≤150rpm)	2.11~900	2.5~375	0.24~36	0.88~132
BT300M	1–350rpm	0.07~1330	1.7~1015			2.11~2100	2.5~875	0.24~84	0.88~308
BT600M	1–600rpm	0.07~2280	1.7~1740			2.11~3600	2.5~1500	0.24~144	0.88~528

CHROMalytic +61(0)3 9762 2034
TECHnology Pty Ltd
Australian Distributors
Importers & Manufacurers
www.chromtech.net.au
Website NEW : www.chromalytic.net.au E-mail : info@chromtech.net.au Tel: 03 9762 2034 . . . in AUSTRALIA

Explosion Proof Peristaltic Pump

EXP600
YZ35 pump head

NEW

EXP600
YZ1515x pump head

NEW

Product Introduction

Shenchen EXP600 explosion-proof pump, driven by explosion-proof motor, the power is strong, the direction is reversible. With poleless speed regulation, the speed can be adjusted manually. High performance, stable flow rate, high torque and low noise, suitable for various pump head and tubing. Can running for a long time continuously, easy for maintenance. Safe and explosion-proof, suitable for various environment, especially for the industrial sites which have inflammable gas or electric problem.

Features

- **Safe explosion proof**, suitable for sites where have electric problem.
- Poleless speed regulation, reversible.
- Stable flow rate, high torque, low noise, suitable for various pump heads and tubings.
- **Can mount 2 pcs YZ15/25 pump heads to increase the flow rate**.Reduce the pulsation, more stable to transfer the fluid.
- Big flow rate design, **the speed range is 180-600rpm/min**.

Installation Sizes Drawing (Unit: mm)

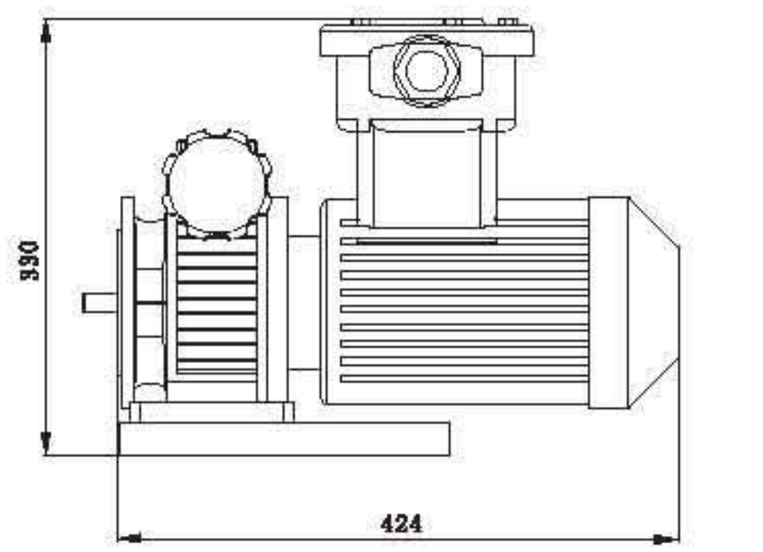

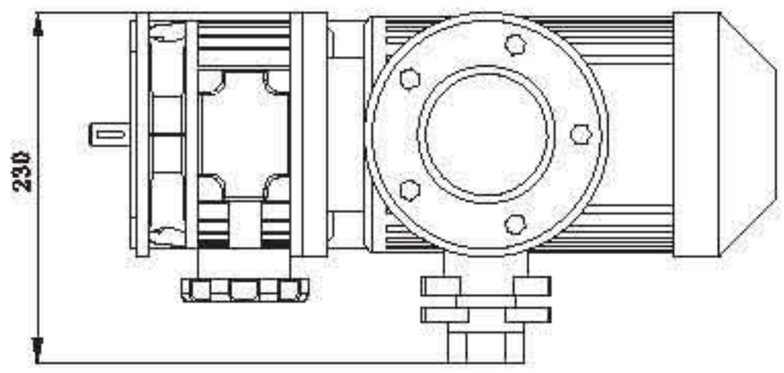

Technical Specifications

Speed range	180-600 rpm
Speed control	Manual electrodeless speed adjusting
Working voltage	AC 3 phase 380V
Environment temperature	0-40℃
Drive dimension	424×230×330 (mm) (L×W×H)
Drive weight	30 kg
Relative humidity	<80%
IP rate	IP55

Product Composition and Flow Rate Range

Drive	Speed	Pump Head	Tubing Size	Flow rates mL/min
EXP600	180-600rpm	YZ1515x	13#、14#、19#、16#、25#、17#、18#	12.6~2280
		YZ2515x	15#、24#	306~1740
		YZ35	26#、73#、82#	1242~12000
		DZ25-3L	15#、24#、35#、36#	379.8~3600
		DZ25-6L	15#、24#、35#、36#	540~6000
		SN15	14#、16#	43.2~528
		SN25	24#	450~1500

CHROMalytic +61(0)3 9762 2034
TECHnology Pty Ltd
Australian Distributors
Importers & Manufacurers
www.chromtech.net.au
Website NEW : www.chromalytic.net.au E-mail : info@chromtech.net.au Tel: 03 9762 2034 . . . in AUSTRALIA

Explosion Proof Peristaltic Pump

Product Introduction

Shenchen QD600 pneumatic pumps, with pneumatic motor driver. Start/stop, direction, stepless speed control functions. Functional design, pneumatic components can turn with >90°, convenient for users to check the pressure value. 304 stainless steel housing, with handle, easy to carry. Suitable for various pump head and tubing. Gas driving, explosion proof and safe, suitable for industrial sites where have inflammable gas and request explosion proof or without power supply.

Explosion Proof

Suitable Pump Head

Multichannel Pump Head (MC1-MC12)

Easy Load Pump Head (YZ1515x、YZ2515x)

Multichannel Pump Head (DG1~DG12)

Standard Pump Head (SN15、SN25)

Features

- Gas driven,safe explosion-proof,apply to power hidden trouble or without power supply.
- Low heat, low temperature -rise
- 150W Low maintenance motor,large torque,stepless speed regulation.
- Start/stop, reverse function, overload protection.
- F.R.L unit direction reversible, when working, it can rotate outward to open and deadlock, convenient for users to observe air pressure value.
- Stainless steel housing with handle, portable and convenient.

Note: carefully placed, prevent static electricity, ensure safe operation.

Working status dimension drawing

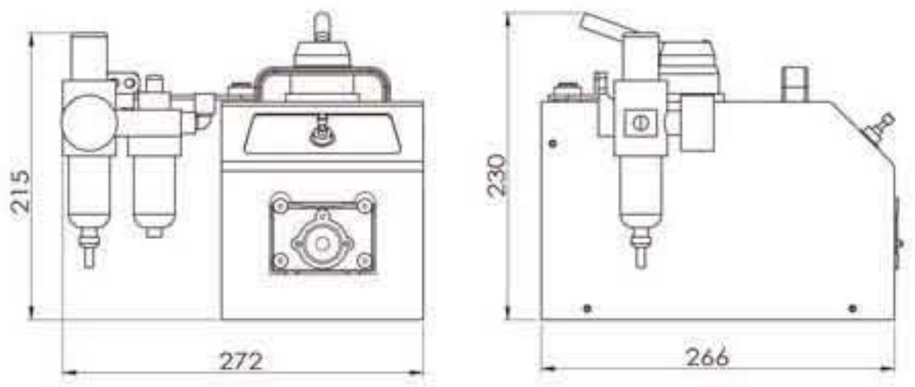

Non-working status dimension drawing

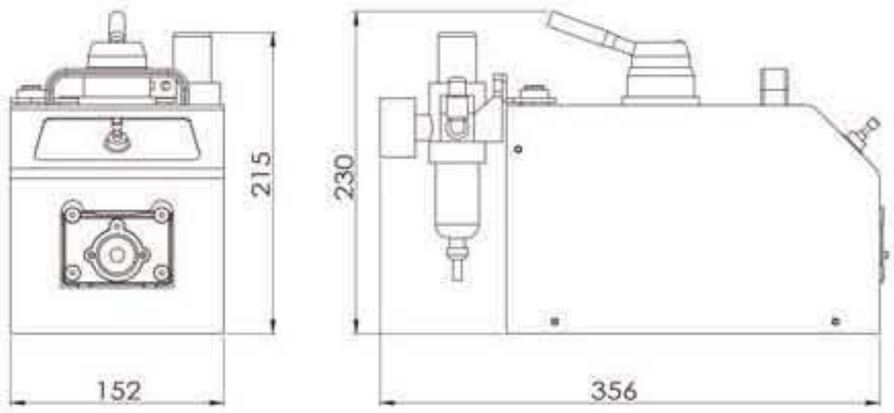

Technical Specifications

Speed range	60~600 rpm
Display	Display air pressure
Speed control	Poleless speed regulation(By adjusting the speed flow valve)
Control function	Start/stop、reversing (gas reversing valve control)
Working air pressure	0.5-0.7Mpa
Gas consumption	4L/Sec
Drive dimension (L x W x H)	Working:266x 272 x 230mm Non–working:356x 152 x 230mm
Power consumption	< 80W
Environment temperature	0–40℃
Relative humidity	< 80%
IP rate	IP31
Drive weight	4.10 kg

Product Composition and Flow Rate Range

Peristaltic Pump		Pump head & Flow rates (mL/min)						
		YZ1515x	YZ2515x	MC1~MC12(10)	MC1~MC12(8)	SN25	SN15–14	SN15–18
Drive & speed / Tubing		13#、14#、19#、16# 25#、17#、18#	15#、24#	Inner diameter: 0.13–3.17mm Wall thickness: 0.86–1mm		24#	14#	16#
QD600	60–600rpm	5–2280	100~1740	2.8-49(suggest working rotating speed≤150rpm)	3.2–84(suggest working rotating speed≤150rpm)	150 ~ 1500	14.4 ~ 144	52.8 ~ 528

CHROMalytic +61(0)3 9762 2034
TECHnology Pty Ltd
Australian Distributors
Importers & Manufacurers
www.chromtech.net.au
Website NEW : www.chromalytic.net.au E-mail : info@chromtech.net.au Tel: 03 9762 2034 . . . in AUSTRALIA

Medical dialysis pump

Product Introduction

UC15 mechanical spring pump head,widely used for medical dialysis equipment.Functional design, simple atmosphere, practicality; with transparent protective cover, it can observe the operating condition anytime.output signal of open cover, stop working when open the cover. assure safe operation.Elastic roller assembly,adaptive tubing pressure gap, working smoothly, low noise. Manual spanner, not only can be used for installing tubing, but also can be used for manual rotate the roller assembly press the tubing, complete the liquid transferring.

Installation Sizes Drawing (Unit: mm)

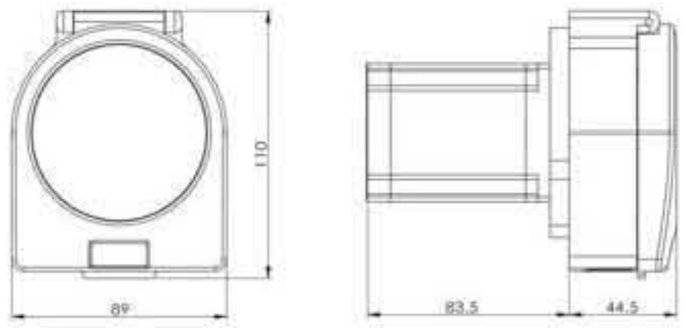

Features

- **Simple atmosphere appearance,compact structure,with broad flow rate range.**
- **Elastic roller assembly, adaptive tubing pressure gap ,adjustable pressure,extend using life.**
- **The transparent protective cover, can observe the operation of realtime.**
- **Manual spanner, can be manual rotation of the roller assembly after power off, complete liquid transferring.**
- **Manual spanner with clamping hose, to solve the traditional spring pump head hose clamping inconvenience.**
- **Open the protective cover, output the "stop signal", to ensure the operation safe and reliable.**

Motor data

Speed range	0.1-120 rpm
Speed resoultion	0.1 rpm
Motor type	Stepper motor
Outlet singal	Open the cover signal (Active signal DC12V)

Open cover output signal description

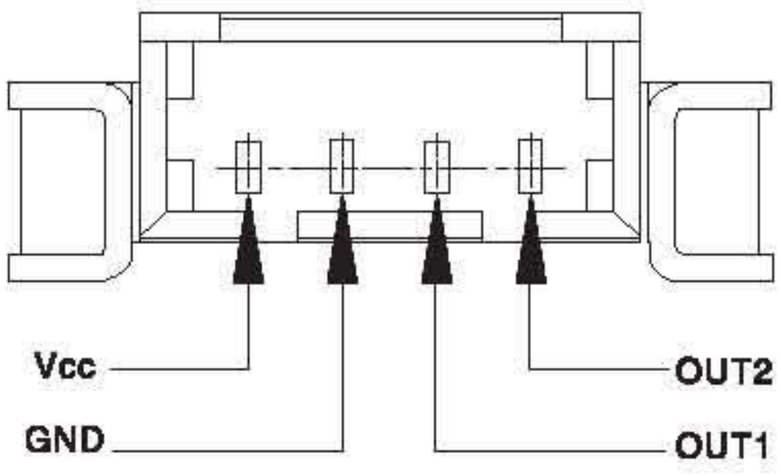

1、Press the down clamp, put the hose into the U shaped groove

2、Put the hose between the two guide posts.Hand spanner, rotate the wheel body.

3、Press the down clamp, put the hose into the U shaped groove

4、Installation is complete.

Technical Specifications

Model	The shell material	Tubing Size	Tubing ID x Wall(mm)	Speed range(rpm)	Flow rates (mL/min)	Weight(kg)
Uc15	Aluminum alloy /PC	19#	2.4 x 1.6	0.1–200	0.08~183	0.5
		16#	3.1 x 1.6		0.15~320	
		25#	4.8 x 1.6		1.1~699	
		17#	6.4 x 1.6		2~1270	
		18#	7.9 x 1.6		2.8~1719	
		Medical dialysis tube		0.1–60	0.86~500	

CHROMalytic +61(0)3 9762 2034
TECHnology Pty Ltd
Australian Distributors
Importers & Manufacurers
www.chromtech.net.au
Website NEW : www.chromalytic.net.au E-mail : info@chromtech.net.au Tel: 03 9762 2034 . . . in AUSTRALIA

Explosion Proof Peristaltic Pump

Product Introduction

Shenchen QD600 pneumatic pumps, with pneumatic motor driver. Start/stop, direction, stepless speed control functions. Functional design, pneumatic components can turn with >90°, convenient for users to check the pressure value. 304 stainless steel housing, with handle, easy to carry. Suitable for various pump head and tubing. Gas driving, explosion proof and safe, suitable for industrial sites where have inflammable gas and request explosion proof or without power supply.

Suitable Pump Head

Multichannel Pump Head (MC1-MC12)

Easy Load Pump Head (YZ1515x、YZ2515x)

Multichannel Pump Head (DG1~DG12)

Standard Pump Head (SN15、SN25)

Working status dimension drawing

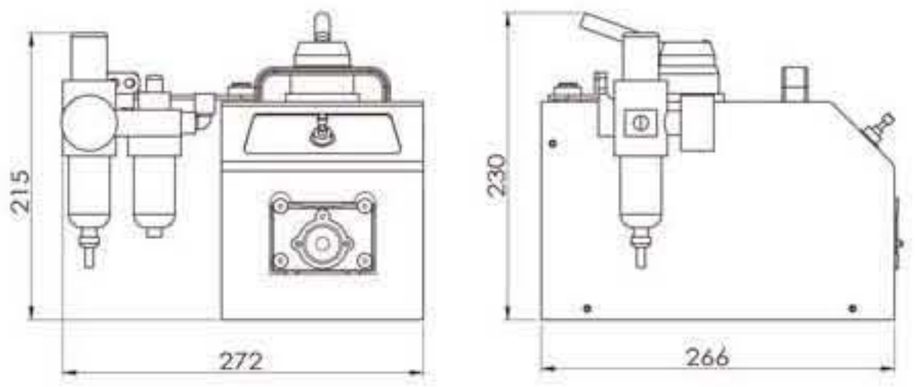

Non-working status dimension drawing

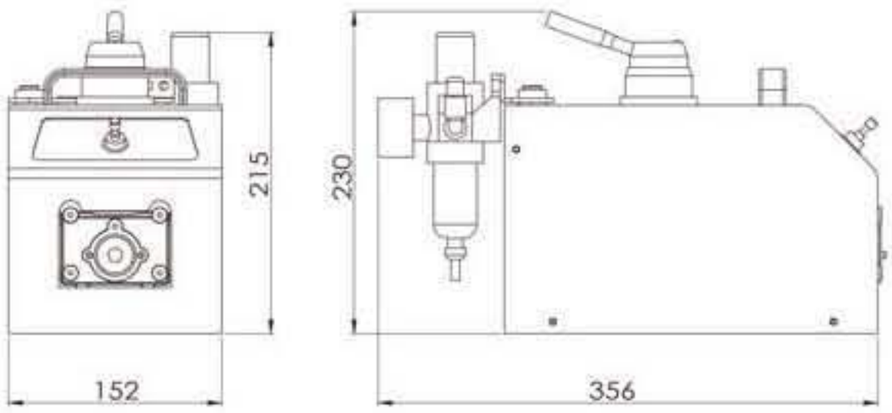

Features

- Gas driven,safe explosion-proof,apply to power hidden trouble or without power supply.
- Low heat, low temperature -rise
- 150W Low maintenance motor,large torque,stepless speed regulation.
- Start/stop, reverse function, overload protection.
- F.R.L unit direction reversible, when working, it can rotate outward to open and deadlock, convenient for users to observe air pressure value.
- Stainless steel housing with handle, portable and convenient.

Note: carefully placed, prevent static electricity, ensure safe operation.

Technical Specifications

Speed range	60~600 rpm
Display	Display air pressure
Speed control	Poleless speed regulation(By adjusting the speed flow valve)
Control function	Start/stop、reversing (gas reversing valve control)
Working air pressure	0.5-0.7Mpa
Gas consumption	4L/Sec
Drive dimension (L x W x H)	Working:266x 272 x 230mm Non–working:356x 152 x 230mm
Power consumption	< 80W
Environment temperature	0–40℃
Relative humidity	< 80%
IP rate	IP31
Drive weight	4.10 kg

Product Composition and Flow Rate Range

Peristaltic Pump		Pump head & Flow rates (mL/min)						
		YZ1515x	YZ2515x	MC1~MC12(10)	MC1~MC12(8)	SN25	SN15–14	SN15–18
Drive & speed / Tubing		13#、14#、19#、16# 25#、17#、18#	15#、24#	Inner diameter: 0.13–3.17mm Wall thickness: 0.86–1mm		24#	14#	16#
QD600	60–600rpm	5–2280	100~1740	2.8-49(suggest working rotating speed≤150rpm)	3.2–84(suggest working rotating speed≤150rpm)	150 ~ 1500	14.4 ~ 144	52.8 ~ 528

CHROMalytic +61(0)3 9762 2034
TECHnology Pty Ltd
Australian Distributors
Importers & Manufacurers
www.chromtech.net.au
Website NEW : www.chromalytic.net.au E-mail : info@chromtech.net.au Tel: 03 9762 2034 . . . in AUSTRALIA

Compact Pump Head–MiniPump Series

MiniPump–2

MiniPump–3

Product Introduction

Multiple pump head MiniPump series peristaltic pump, use 57 stepper motor drive. Based on the compact and embedded design, mounting 2, 3 and 4 pump heads, add the channel numbers up to 2-8. The Minipump suitable for 8 different size tube, flow rate range is 0.0024-190mL/min.

No connector

4 kinds of connect tubing way

Installation Sizes Drawing (Unit: mm)

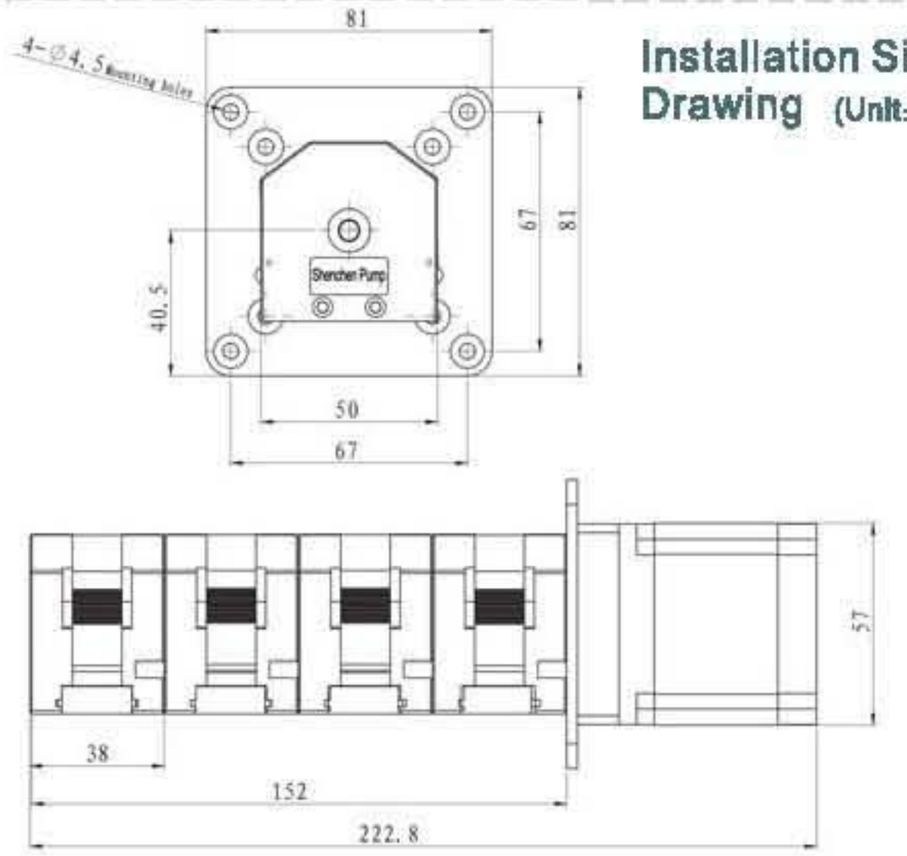

MiniPump Series and MiniPump-N Series Technical Specifications

Rotation speed (rpm)	Flow rates (mL/min) and tubing (1 mm wall thickness, dual channel)			
	ID 1 mm	ID 2 mm	ID 2.5 mm	ID 3 mm
5	0.25	0.90	1.28	1.78
10	0.49	1.84	2.59	3.52
15	0.74	2.76	3.85	5.30
25	1.25	4.57	6.43	8.80
40	2.00	7.31	10.25	14.02
50	2.52	9.14	12.78	17.47
75	3.76	13.64	19.04	26.12
100	5.03	18.17	25.42	35.34
200	10.12	36.45	51.27	71.44
250	12.63	45.75	64.34	88.35
300	15.01	54.63	76.84	108.39

Rotation speed (rpm)	Flow rates (mL/min) and tubing (1.6 mm wall thickness, single channel)			
	13# Tubing ID 0.8 mm	14# Tubing ID 1.6 mm	16# Tubing ID 3.1 mm	25# Tubing ID 4.8 mm
5	0.12	0.56	1.97	3.26
10	0.26	1.15	3.90	6.41
15	0.39	1.74	5.80	9.52
25	0.66	2.88	9.59	15.74
40	1.08	4.59	15.29	25.15
50	1.34	5.69	18.96	31.14
75	2.00	8.54	28.36	46.55
100	2.73	11.37	37.66	61.98
200	5.46	22.76	76.02	124.14
250	6.81	28.40	95.08	153.63
300	8.28	33.88	114.31	190.00

CHROMalytic +61(0)3 9762 2034
TECHnology Pty Ltd
Australian Distributors
Importers & Manufacurers
www.chromtech.net.au
Website NEW : www.chromalytic.net.au E-mail : info@chromtech.net.au Tel: 03 9762 2034 . . . in AUSTRALIA

Multichannel Pump Head-MC Series

MC系列

POM Material &PVDF Material

Appearance design patent No.: ZL2011 3 0101376.9
The utility model patent No: ZL2011 2 0169392.2

Product Introduction

MC series new generation multichannel pump head with unique cam structure, make it more easy to operate. It is designed for small flow rates and multichannel transfer. Comparing with traditional DG pump head, it has particular cam design for micro adjustment occlusion, and also for opening the cartridge from the top. 304 stainless steel rollers assembly include two structures of 6 rollers and 10 rollers. Install silicone tubing and TYGON series imported tubing. It is widely used in supporting analytical instruments.

Model Number

- MC1 MC2 MC3
- MC4 MC5 MC6
- MC8 MC10 MC12

Typical Application

- Support blood sugar analytical device.
- Support ammonian analytical instrument.

Installation Sizes Drawing (Unit: mm)

Note: Increasing or reducing one channel,the pump head size need to increase or reduce the thickness of one cartridge.

Installation Sizes Drawing (Unit: mm)

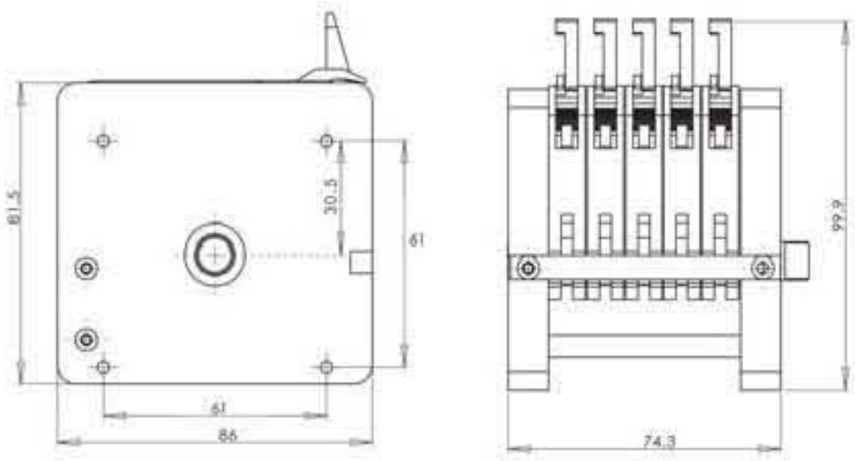

Note: Increasing or reducing one channel, the pump head size need to increase or reduce the thickness of one cartridge.

MC Pump VS DG Pump

1. The traditional DG series pump head need to open the cartridge from the bottom. It is very inconvenient to use when the space of the equipment is compact. The MC series pump head just need to open the cartridge from the top, easy to operate.

2. The gear on the MC pump head is smaller than DG, this improved the adjusting resolution.

DG Series

CHROMalytic +61(0)3 9762 2034
TECHnology Pty Ltd
Australian Distributors
Importers & Manufacurers
www.chromtech.net.au
Website NEW : www.chromalytic.net.au E-mail : info@chromtech.net.au Tel: 03 9762 2034 . . . in AUSTRALIA

SHENCHEN

Multichannel Pump Head-MC Series

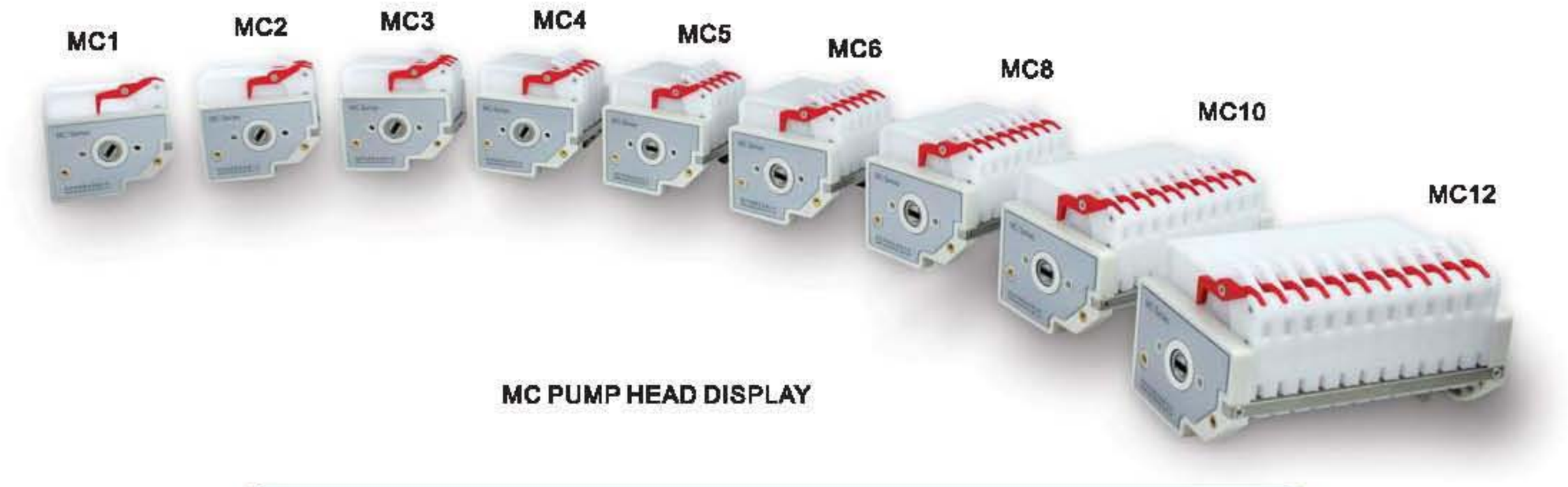

MC PUMP HEAD DISPLAY

Tubing Installation Procedure

A. Turn the spanner clockwise to take it off from the lever.

B. After that, the cartridge can be taken out lightly.

C. Install the tubing and confirm the working position between two adjacent clamps.

D. Embed the cartridge and press it lightly to reach the working position.

E. Turn the spanner counter-clockwise to make it reach the lever.

F. Multichannel pump heads and tubing drawing

MC Technical Specifications

Pump head		MC1	MC2	MC3	MC4	MC5	MC6	MC8	MC10	MC12
Channel number		1	2	3	4	5	6	8	10	12
Tubing				1×1	2×1		2.4×0.8	2.79×0.9		3×1
ID (mm)				1	2		2.4	2.79		3
Wall thickness(mm)				1	1		0.8	0.9		1
Cartridge material				POM/PVDF						
Rollers number and material				10 rollers, 304/316 stainless steel material						
Flow rates of pump head with 10 rollers (mL/min)	0.1~50rpm			0.0046~2.27	0.016~7.64		0.021~10.50	0.024~12.33		0.032~16.22
	50~100rpm			2.27~4.69	7.64~16.11		10.50~21.65	12.33~22.60		16.22~32.00
	100~150rpm			4.69~7.03	16.11~23.07		21.65~31.26	22.60~36.62		32.00~49.07
Rollers number and material				6 rollers, 304/316 stainless steel material						
Flow rates of pump head with 6 rollers (mL/min)	0.1~50rpm			0.0053~2.60	0.02~10.07		0.027~12.72	0.037~18.50		0.043~22.21
	50~100rpm			2.60~5.25	10.07~20.41		12.72~26.97	18.50~37.00		22.21~42.17
	100~150rpm			5.25~8.13	20.41~33.08		26.97~44.62	37.00~55.50		42.17~65.00
Tubing maximum pressure (Mpa)	Continuous						0.1			
	Intermittent						0.1			

CHROMalytic TECHnology Pty Ltd +61(0)3 9762 2034
Australian Distributors Importers & Manufacurers www.chromtech.net.au
Website NEW : www.chromalytic.net.au E-mail : info@chromtech.net.au Tel: 03 9762 2034 . . . in AUSTRALIA

Multichannel Pump Head-MD Series

MD3

NEW

Product Introduction

Suitable for liquid transferring of small flow rate and multiple channels. Complete compression block design, can improve the accuracy among channels effectively; with the function of micro adjustment occlusion, to micro adjust the flow rate and output pressure.

Model Number

- MD3

Typical Application

- Support analytical instruments

Features

- Complete compression block design, improve the accuracy among channels effectively.
- Micro adjustment occlusion,not only prolonging tubing use life, but also micro adjust the flow rate and output pressure.
- Embedded design,it is convenient used for various instruments.
- Stepper motor drive,accurate and reliable.
- 0.8-1mm wall thickness of tubing.
- 304 stainless steel roller assembly.

Installation Sizes Drawing (Unit: mm)

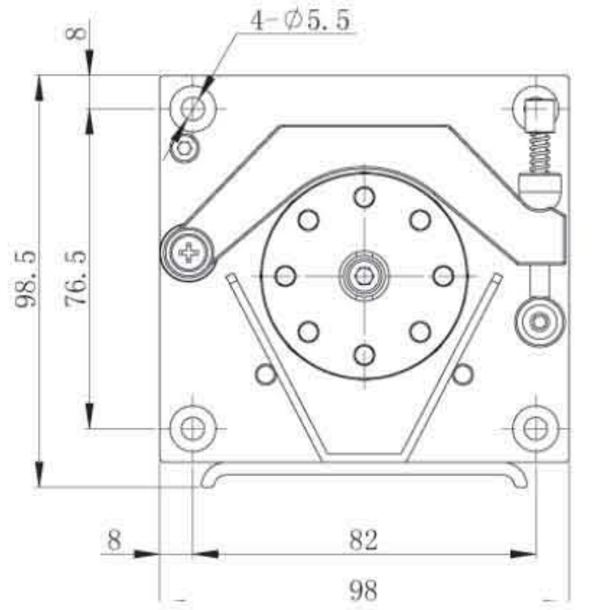

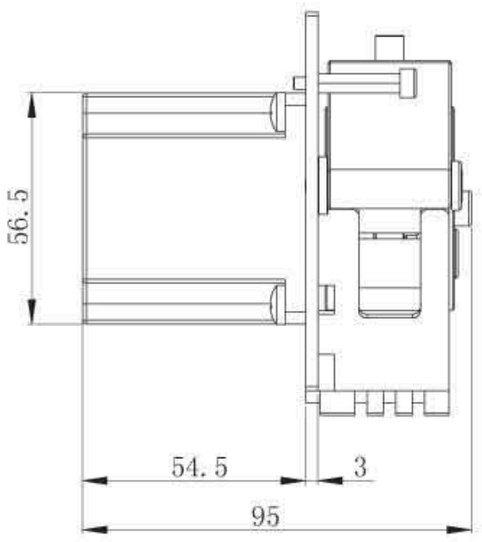

Tubing Installation Procedure

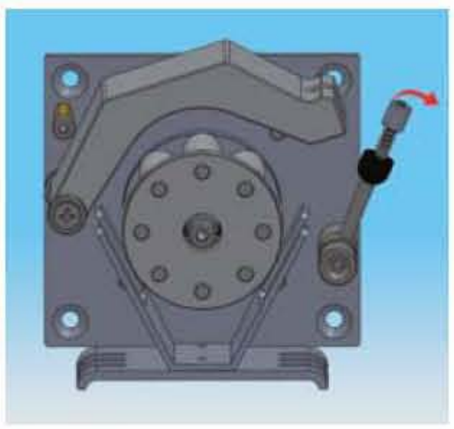

1.Turn the spanner clockwise

2.Install tubing one by one, inside-out

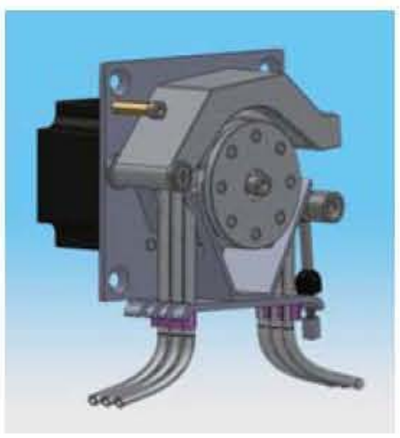

3.Tubing installation complete

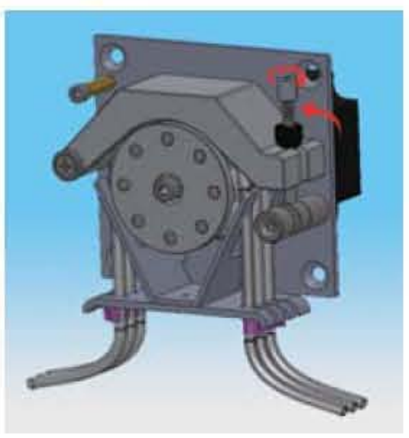

4.Turn spanner anticlockwise, locking the upper block,micro adjust the occlusion.

Technical Specifications

Pump head	Channel number	Speed (rpm)	Tubing	Flow rates (0.1-300rpm)	Rollers number	Rollers material	Cartridge material
MD3	3	0.1-300	1×1	0.007–20.95 mL/min (each channel)	8 rollers	304 stainless steel	POM
			2×1	0.0244–74mL/min (each channel)			
			2.79×0.86	0.0356–107mL/min (each channel)			

Note:Can customerize channel numbers according with customers' request.

HROMalytic +61(0)3 9762 2034
ECHnology Pty Ltd
Australian Distributors
Importers & Manufacurers
www.chromtech.net.au
Website NEW : www.chromalytic.net.au E-mail : info@chromtech.net.au Tel: 03 9762 2034 . . . in AUSTRALIA

SHENCHEN

Multichannel Pump Head-DG Series

DG系列

Product Introduction

The first generation multichannel pump head is used for multichannel transfer micro liquid. Occlusion can be adjusted. Widely used in supporting analytical instruments.

Features

- Accept 0.13mm-3.17mm ID tubing.
- Easy to change and fix the tubing. Occlusion can be adjusted slightly by ratchet wheel.
- Offer 1,2,4,6,8,12 channels for selection. Non-standard products can be customized according to customer's requirements.
- 304 stainless steel rollers assembly. Provide two roller structures: 6 rollers and 10 rollers.

Model Number

- DG-1
- DG-2
- DG-4
- DG-6
- DG-8
- DG-12

Typical Application

- Widely used in the analytical instruments and laboratories

Installation Sizes Drawing (Unit: mm)

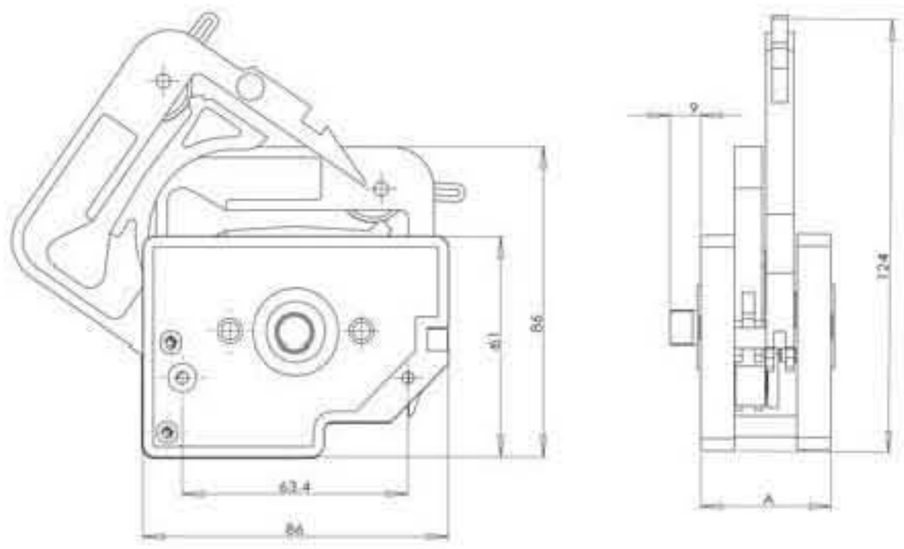

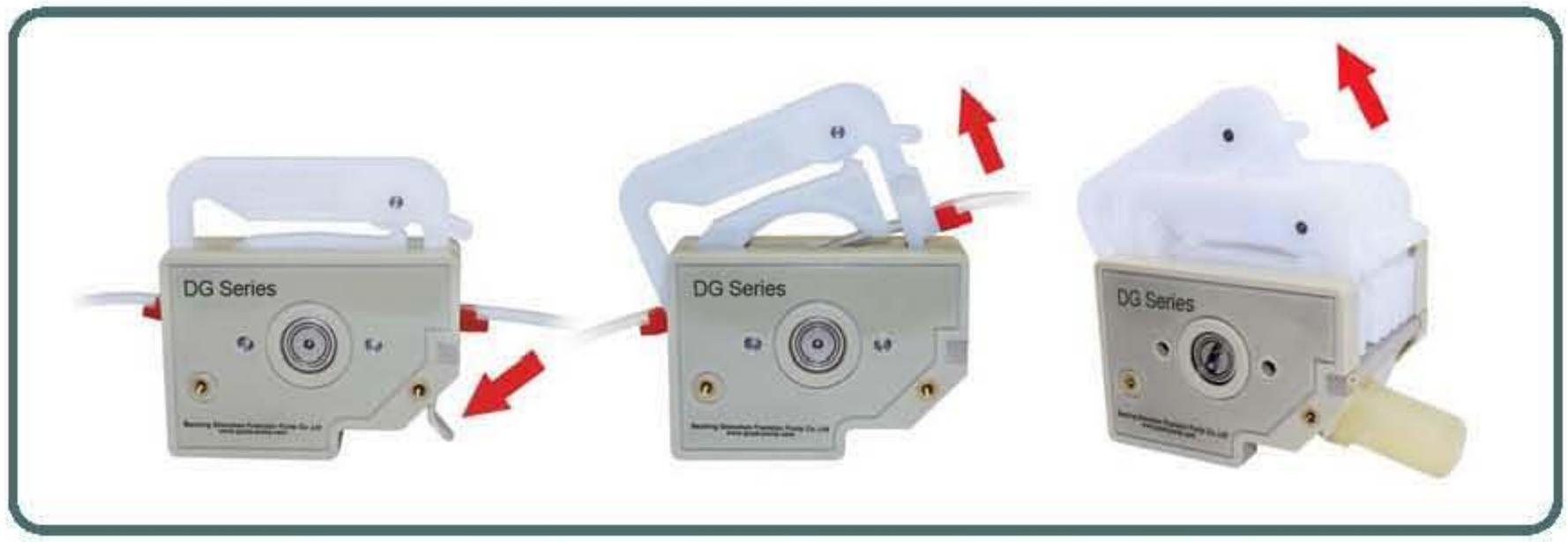

DG-4, DG-6, DG-8, DG-12 use unique spanner to open the cartridge

Technical Specifications

Pump head		DG-1	DG-2	DG-4	DG-6	DG-8	DG-12
Channel number		1	2	4	6	8	12
Tubing		Inside Diameter: 0.13–2.5mm,wall thickness: 0.5–1mm					
Flow rates (≤100rpm)	6 rollers	0.00008–27 mL/min(per channel)					
	10 rollers	0.000067–21.6 mL/min (per channel)					
Cartridge material		POM					
Rollers material		304 stainless steel					
Weight (kg)	6 rollers	0.21	0.27	0.40	0.54	0.67	0.95
	10 rollers	0.20	0.26	0.39	0.51	0.63	0.88

CHROMalytic +61(0)3 9762 2034
TECHnology Pty Ltd
Australian Distributors
Importers & Manufacurers
www.chromtech.net.au
Website NEW : www.chromalytic.net.au E-mail : info@chromtech.net.au Tel: 03 9762 2034 . . . in AUSTRALIA

Multichannel Pump Head-MT12

MT12

Product Introduction

12 channels peristaltic pump with the unique complete compression block design, solves the big error problem between channels from traditional multichannel pump heads. The compact structure for saving room, widely used in high precision request of flow rates among channels, such as chemistry analytical instruments, etc. Accept many kinds of motors drive, such as stepper motor, DC motor and AC motor.

Model Number

- MT12

Typical Application

- Support the chemistry analytical instruments

Features

MT12 peristaltic pump is designed specially for increasing the precision among channels. The main body is made from aluminum alloy material. One compression block can press and fix 12 tubes at the same time to improve the transfer consistency and increase the transfer precision between channels.

Installation Sizes Drawing (Unit: mm)

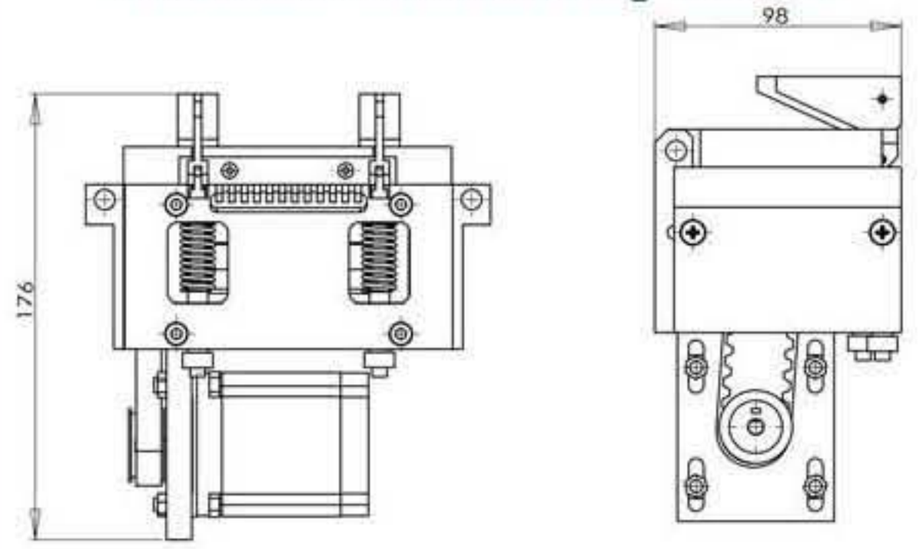

The opening state drawing of compression block

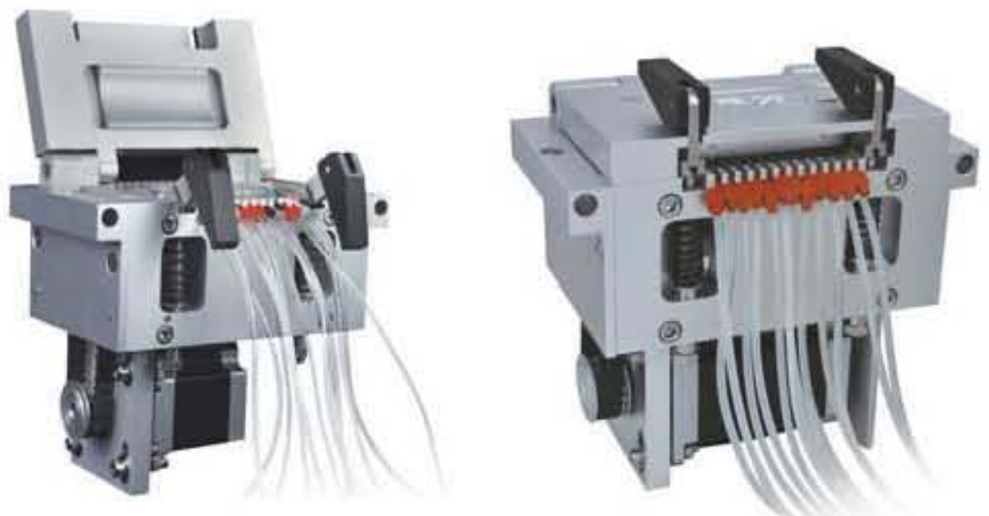

Technical Specifications

Model No.	Housing material	Rollers material	Channel number	Rollers number	Speed (rpm)	Tubing and flow rates per channel (mL/min)				Tubing maximum pressure (Mpa)	
						0.51×0.9	1.02×0.86	2.06×0.86	2.54×0.86	Intermittent	Continuous
MT12	Aluminum alloy	304/316 stainless steel	12 channels	10 rollers	0.1–50	0.0016~0.84	0.005~2.5	0.015~7.5	0.020~10.5	0.2	0.15

CHROMalytic +61(0)3 9762 2034
TECHnology Pty Ltd
Australian Distributors
Importers & Manufacurers
www.chromtech.net.au
Website NEW : www.chromalytic.net.au E-mail : info@chromtech.net.au Tel: 03 9762 2034 . . . in AUSTRALIA

Easy Load Pump Head-YZ Series

YZ1515x

PSF

Product Introduction

Change the tubing easily and rapidly; automatic tubing retention; accept 9 sizes tubing to meet different flow rates requests. Two kinds of material housing for customers' selection. PSF (polysulphone material): white, exquisite appearance, good rigidity, high precision, usually used in research laboratory and supporting analytical device. PPS (polyphenylene sulfide material): black, resist organic solvent corrosion, high precision and rigidity, suitable for industry or other bad working conditions. Rollers assembly with 304 stainless steel material resists corrosion with long lifetime.

Model Number

- YZ1515x
- YZ2515x

Typical Application

- Support COD on-line monitor.
- Support anorectal therapeutic instrument.
- Support biofermentation cylinder.

YZ2515x

PPS

Installation Sizes Drawing (Unit: mm)

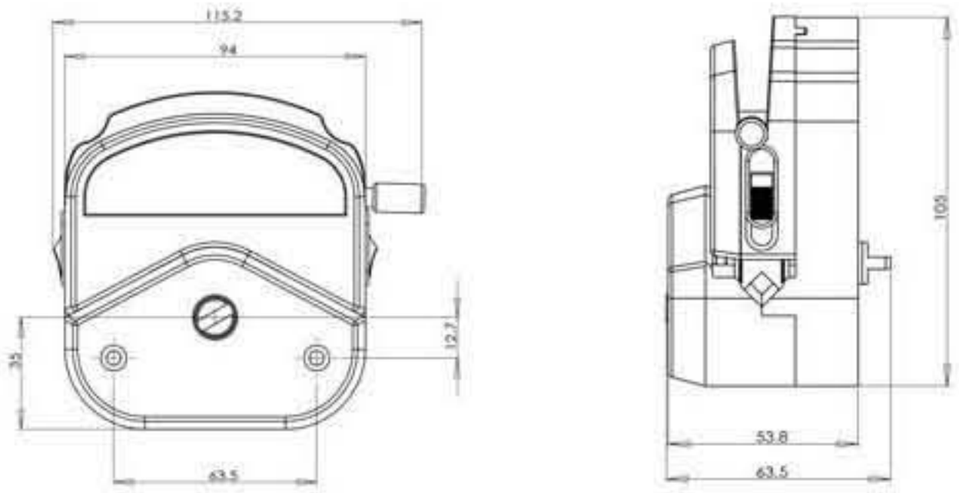

YZ35

PPS

Aluminum Alloy

Product Introduction

YZ35 pump head with aluminum alloy or PPS housing material. 304 stainless steel rollers assembly achieve high precision transferring liquid. Adaptive tubing cartridge structure makes it more easy to load the tubing.

Model Number

- YZ35
- YZ35-PPS

Features

- Aluminum alloy and PPS housing.
- 304 stainless steel rollers assembly.
- Large flow rates design: 12L/min

Installation Sizes Drawing (Unit: mm)

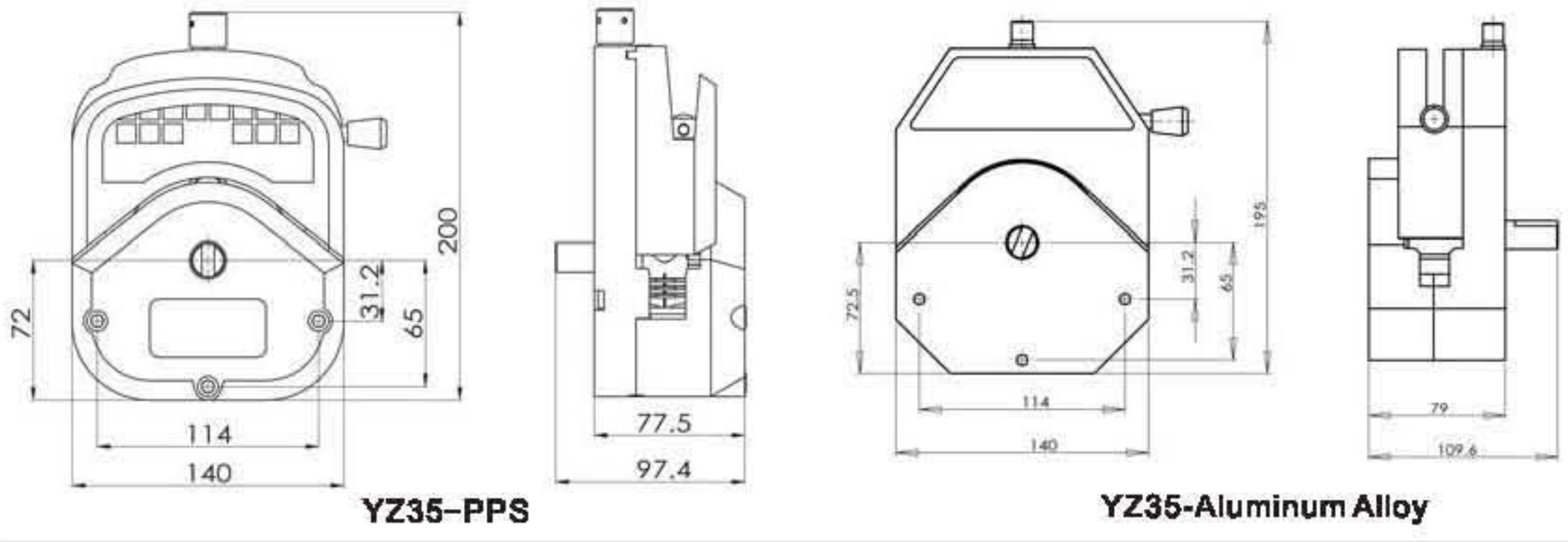

YZ35-PPS

YZ35-Aluminum Alloy

CHROMalytic +61(0)3 9762 2034
TECHnology Pty Ltd
Australian Distributors
Importers & Manufacurers
www.chromtech.net.au
Website NEW : www.chromalytic.net.au E-mail : info@chromtech.net.au Tel: 03 9762 2034 . . . in AUSTRALIA

Easy Load Pump Head-YZ Series

Features

- The housing material of white pump head-PSF or PSU(polysulphone) PSF material pump head has white and good appearance. It resists high temperature, has long-term usage from -100℃ to 150℃, perfect ageing resistant performance in the high temperature. PSF pump head can resist corrosion of most inorganic acid, base and salt, but cannot resist organic solvent corrosion. If transfer organic solvent, please choose the PPS pump head.

- The housing material of black pump head—PPS (polyphenylene sulfide) PPS material has high molding precision and perfect rigidity. The pump head can achieve long-term running heavily and transfer fluid with high accuracy. Resist high temperature of 200℃ and corrosion especially in the strong chemical corrosion resistance, such as organic solvent, etc.

- Rollers material---304 stainless steel
Resist corrosion; Not easy to rust; High sanitary grade and low repair rate. All save the cost for customers.

3 rollers 6 rollers

- Suitable for 9 different sizes tubing to ensure the same transfer precision-5‰~1% in different flow ranges.

Mounting several pump heads can increase the flow rates.

YZ Series pump head has wide application, and is usually used together with many kinds of analytical instruments. According to the different technical requests, it can adopt different motors to drive, such as stepper motor, DC motor, synchronous motor, AC gear motor, etc. Stack up several pump heads can increase the flow rates.

Tubing Installation Procedure

A. Move lever to the left according with arrow direction, to open the pump head.

B. Install the correct size tubing.

C. Rotate the lever to the right according with arrow direction, to close the pump head.

D. Working status: Replace the compression block and fix the tubing, then ready for working.

Technical Specifications

Pump head	Tubing	ID × Wall(mm)	mL / r	Flow rates(mL/min) (1–600rpm)	Tubing Max.pressure(Mpa)		Material/Weight(kg)	
					Intermittent	Continuous	PSF	PPS
YZ1515x	13#	0.8×1.6	0.07	0.007~42	0.27	0.17	0.40 (3 rollers)	0.46 (3 rollers)
	14#	1.6×1.6	0.27	0.027~162				
	19#	2.4×1.6	0.55	0.055~330				
	16#	3.1×1.6	0.82	0.082~492				
	25#	4.8×1.6	1.7	0.17~1020	0.24	0.14	0.44 (6 rollers)	0.50 (6 rollers)
	17#	6.4×1.6	2.9	0.29~1740	0.14	0.10		
	18#	7.9×1.6	3.8	0.38~2280	0.10	0.07		
YZ2515x	15#	4.8×2.4	1.7	0.17~1020	0.27	0.17		
	24#	6.4×2.4	2.9	0.29~1740				
YZ35	26#	6.4×3.3	6.9	0.69~4200	0.27	0.20	Aluminum Alloy	PPS
	73#	9.6×3.3	12.3	1.23~7400			4.36	1.50
	82#	12.7×3.3	20	2~12000	0.14	0.10		

CHROMalytic +61(0)3 9762 2034
TECHnology Pty Ltd
Australian Distributors
Importers & Manufacurers
www.chromtech.net.au
Website NEW : www.chromalytic.net.au E-mail : info@chromtech.net.au Tel: 03 9762 2034 . . . in AUSTRALIA

Fast Load Pump Head-DZ Series

DZ25系列

Product Introduction

Easy operation, change tube rapidly. The house material is aluminum alloy or PPS (polyphenyl thioether). 304 stainless steel rollers. DZ25 pump head use 2.4mm wall thickness tube, the flow rate range is 3-6000mL/min. This pump head is suitable for high viscous liquid which include granule and floc. It also suitable for high pressure request. New cartridge structure design,can use the special connector, connect low cost tubing outside the pump head to save cost; also can use flexible tube card, meet hygiene requirement.

Model Number

- DZ25-3L
- DZ25-6L

Features

- Cartridges and base body is separated. It is convenient to change the tubing.
- New cartridge structure design, can use both the special connector and the flexible tube card.
- Wide flow rate range, accept 15#, 24#, 35# and 36# tubing.
- Pump head is stackable.

① Connector

The tubing length is 128mm between both connectors.

② Cartridge

DZ25-6L: the tubing length is 125mm between both cartridges.
DZ25-3L: the tubing length is 90mm between both cartridges.

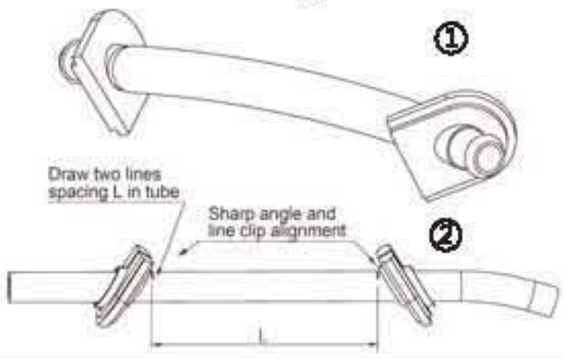

Installation Sizes Drawing (Unit: mm)

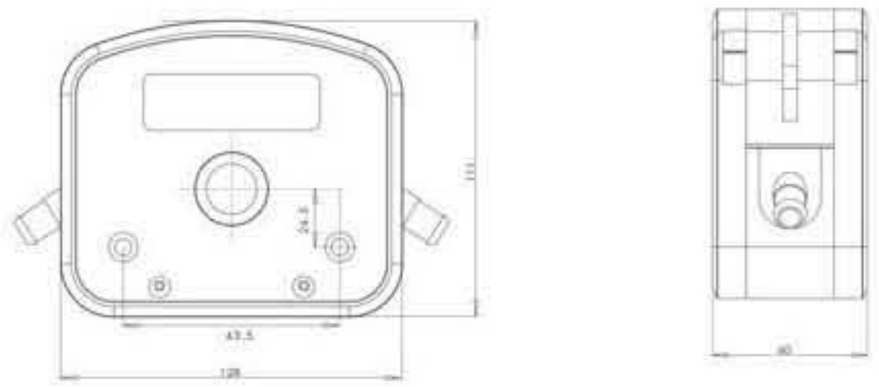

DZ25–6L Dimension

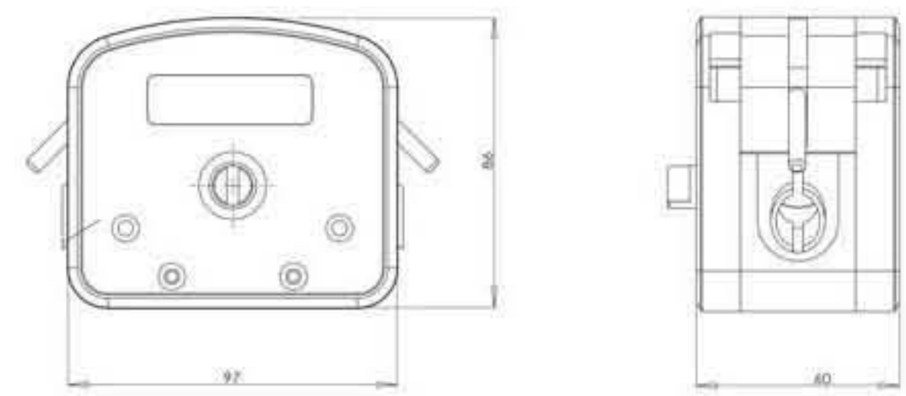

DZ25–3L Dimension

Tubing Installation Procedure

1.Lift both side levers, take off the upper block.

2.Put the tubing with cartridge or connector into pump housing.

3.Install the upper block, put down the levers to lock the block.

Technical Specifications

Model No.	Housing Material	Cartridge/ Connector material	Tubing		Flow rates (mL/min) (0.1-600rpm)	Weight (kg)
			Tubing sizes	ID x Wall(mm)		
DZ25-6L	Aluminum alloy	PP	15#	4.8x2.4	0.3~1800	1.86
			24#	6.4x2.4	0.55~3300	
			35#	7.9x2.4	0.8~4800	
			36#	9.6x2.4	1~6000	
DZ25-3L	Aluminum alloy/ PPS	PP	15#	4.8x2.4	0.211~1264	1.16/0.5
			24#	6.4x2.4	0.385~2310	
			35#	7.9x2.4	0.508~3050	
			36#	9.6x2.4	0.6~3600	

CHROMalytic +61(0)3 9762 2034
TECHnology Pty Ltd
Australian Distributors
Importers & Manufacurers
www.chromtech.net.au
Website NEW : www.chromalytic.net.au E-mail : info@chromtech.net.au Tel: 03 9762 2034 . . . in AUSTRALIA

Low Pulse Pump Head-DY Series

DY15/DY25

Product Introduction

The 'low pulse' pump head is designed special for high precision filling.Through the phase difference between the two sets of rollers,make the pulse crest and trough complementary,reducing the fluid pulsation effectively,reach high precision liquid transferring.

Model Number

- DY15
- DY25

Pulsation Reduction Schematic Diagram

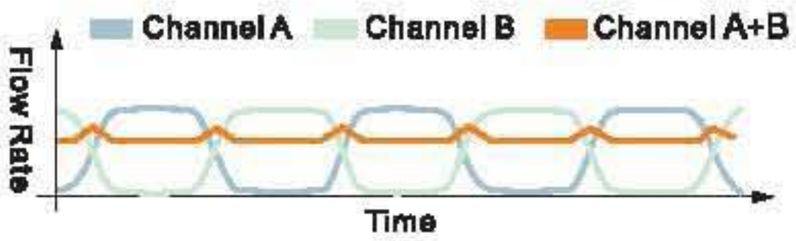

Three way connector and tubing cartridge schematic diagram

The tubing length is 126mm between two cartridges

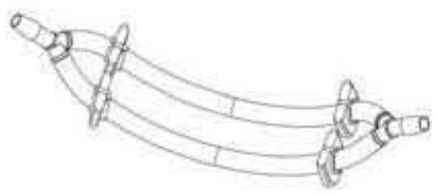

Installation Sizes Drawing (Unit: mm)

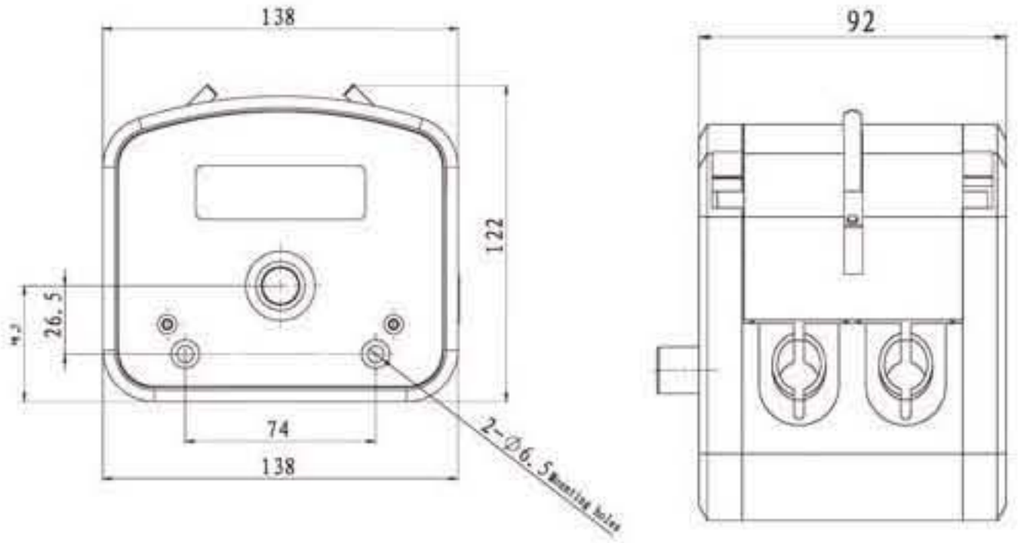

Rollers Assembly

Features

- Complementary phase 304 stainless steel roller assembly, effective reducing the fluid pulsation.
- Pump head housing material is aluminum alloy.
- Using flexible tubing cartridge, install tubing easy and fast.
- The flexible block assembly with adaptive' tubing gap' function, extend the tubing life effectively.

Tubing Installation Procedure

1.Lift both side levers, take off the upper block.

2.Put the tubing with cartridge or connector into pump housing.

3.Install the upper block, put down the levers to lock the block.

Technical Specifications

Model No.	Housing Material	Cartridge/ Connector material	Tubing		Flow rates (mL/min) (0.1-350rpm)	Weight (kg)
			Tubing sizes	ID×Wall(mm)		
DY15	Aluminum alloy	PP	13#	0.8×1.6	0.01~48	3.2
			14#	1.6×1.6	0.06~223	
			19#	2.4×1.6	0.13~448	
			16#	3.1×1.6	0.2~723	
			25#	4.8×1.6	0.47~1626	
			17#	6.4×1.6	0.64~2230	
			18#	7.9×1.6	0.95~3337	
DY25	Aluminum alloy	PP	15#	4.8×2.4	0.42~1480	
			24#	6.4×2.4	0.76~2670	
			35#	7.9×2.4	1~3600	
			36#	9.6×2.4	1.24~4340	

CHROMalytic +61(0)3 9762 2034
TECHnology Pty Ltd
Australian Distributors
Importers & Manufacurers
www.chromtech.net.au
Website NEW : www.chromalytic.net.au E-mail : info@chromtech.net.au Tel: 03 9762 2034 . . . in AUSTRALIA

Standard Pump Head–SN Series

SN25/SN15

Installation Sizes Drawing (Unit: mm)

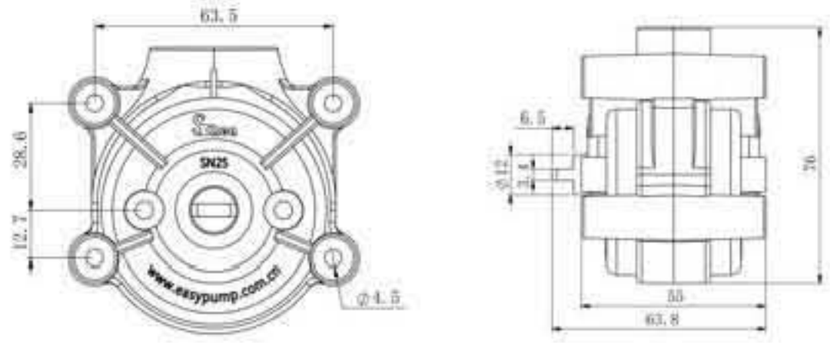

Product Introduction

Standard pump head with compact structure, exquisite appearance, fixed occlusion and stable running. Can stack several pump heads, and support various equipment.

Model Number

- SN25
- SN15-14
- SN15-16

Typical Application

- Use in the ice cream machine and coffee making machine
- Support COD on-line monitor

Tubing Installation Procedure

A. Disassemble the pump head, and press the tubing on the rollers.

B. Make the tubing go around the rollers one cycle, and merge it on the exit.

C. Tighten the tubing aptly, and load the other half pump head body.

SN series pump head technical specification

Model No.	Housing material	Rollers material	Tubing		Flow rates (mL/min) (1-600rpm)	Weight (kg)
			Tubing sizes	ID × Wall(mm)		
SN15–14	PC	304 stainless steel	14#	1.6×1.6	0.024~144	0.20
SN15–16			16#	3.1×1.6	0.088~528	
SN25			24#	6.4×2.4	0.25~1500	

UD15

Product Introduction

Ud15 pump head, compact structure, embedded design, there is water–proof groove in the pump head mounting side, more suitable for supporting various kinds of equipment. PES material, good rigidity and high precision. Transparent protecting cover, easily to observe the working situation of pump head and tubing at any time. Can use stepper motor、DC motor、AC motor and various driver, the application is widely.

Installation Sizes Drawing (Unit: mm)

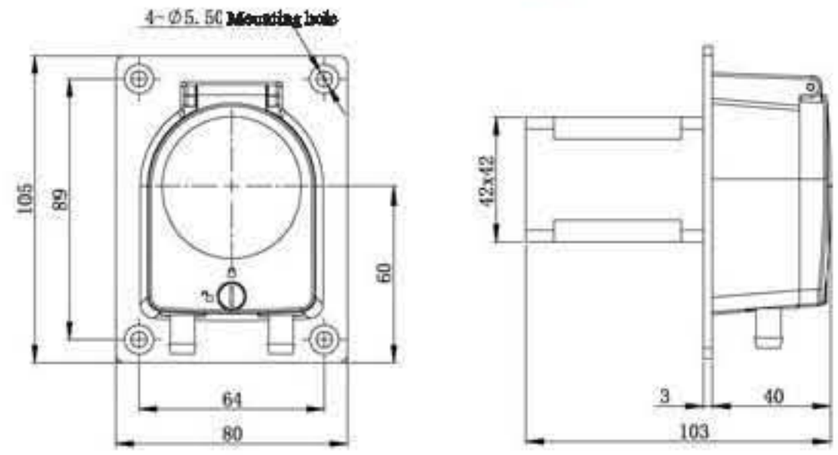

1. As below picture, turn the holding pin to unlocking position

2. Open the transparent cover

3. Install the tubing

4.Close the transparent cover, and turn the holding pin to unlocking position

UD15 Technical Specifications

Model No.	House material		Tubing		Speed Range(rpm)	Flow rates (mL/min)	Weight (kg)
	Body	Protective cover	Tubing sizes	ID × Wall(mm)			
UD15	PES	Transparent PC	16#	3.1×1.6	0.1~350	0.08~280	0.12
			25#	4.8×1.6		0.16~580	
			17#	6.4×1.6		0.30~1000	

CHROMalytic +61(0)3 9762 2034
TECHnology Pty Ltd
Australian Distributors
Importers & Manufacurers
www.chromtech.net.au
Website NEW : www.chromalytic.net.au E-mail : info@chromtech.net.au Tel: 03 9762 2034 . . . in AUSTRALIA

OEM Product

OEM–B01

Outline dimensional drawing

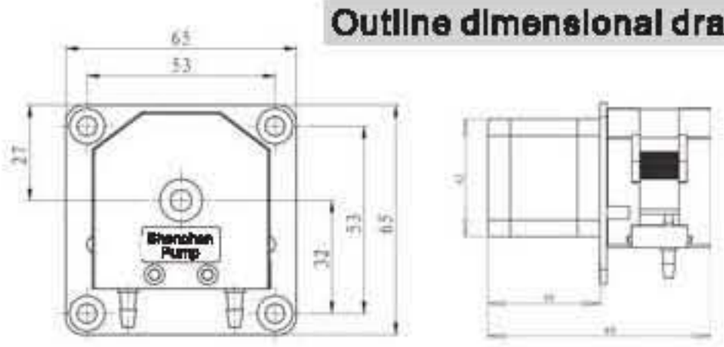

Speed range	≤300 rpm
Max flow rate	190mL/min
Motor type	42 stepper motor
Motor phase number	2
Motor step angle	1.8
Motor phase voltage	2.2V
Motor phase current	1.0A

OEM–MZ Series

Outline dimensional drawing

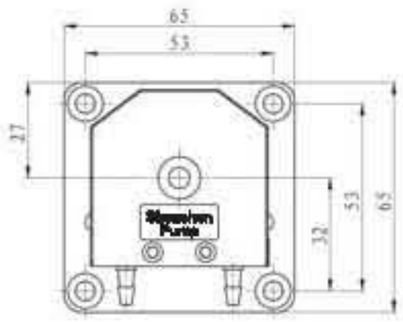

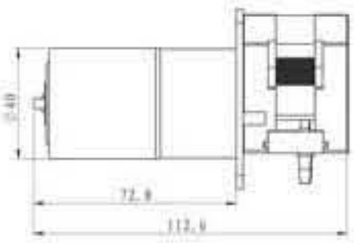

Model number	Rotation speed (rpm)	Power supply	Motor type
OEM–MZ01	170	DC 24V	Ø 37 DC Motor
OEM–MZ11	5		
OEM–MZ12	10		
OEM–MZ13	15		
OEM–MZ14	20		
OEM–MZ15	30		
OEM–MZ16	60		
OEM–MZ17	100		
OEM–MZ18	160		
OEM–MZ19	167		
OEM–MZ20	278		

OEM–MJ Series

NEW

Outline dimensional drawing

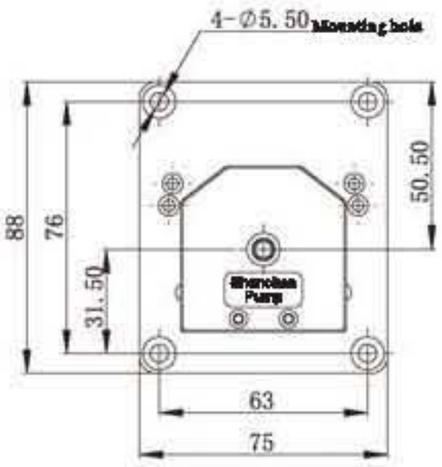

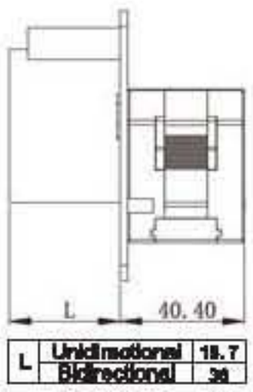

L	
Unidirectional	18.7
Bidirectional	30

Model number	Rotation speed (rpm)	Direction of rotation	Power supply	Motor type
OEM–MJ101	2.5/3	Unidirectional	AC 110V or AC 220V	AC Motor
OEM–MJ102	4/5			
OEM–MJ103	5/6			
OEM–MJ201	4.2/5	Bidirectional		
OEM–MJ202	5/6			
OEM–MJ203	11.7/14			

Note:In the rotation of speed,"/"represents the rotation speed in 50/60HZ.

OEM–B126

Outline dimensional drawing

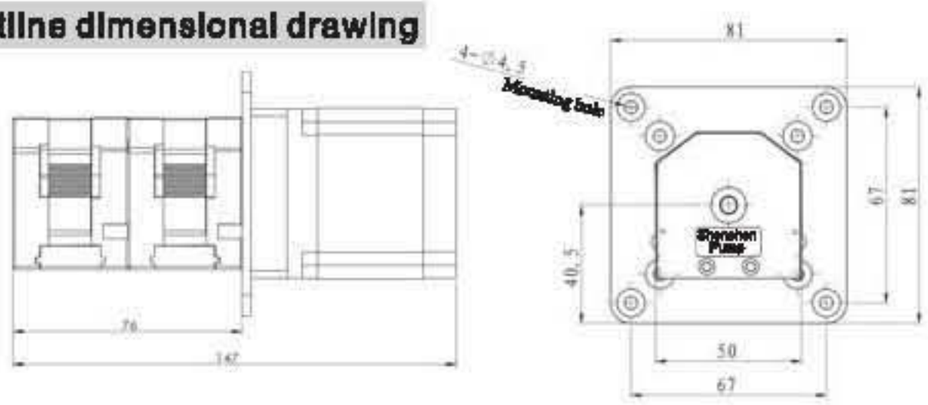

Speed range	≤300 rpm
Max flow rate	190mL/min
Pump head	MiniPump–N
Motor type	57 stepper motor
Motor phase number	2
Motor step angle	1.8
Motor phase voltage	3.75V
Motor phase current	3.0A

OEM–B013、OEM–B014

Outline dimensional drawing

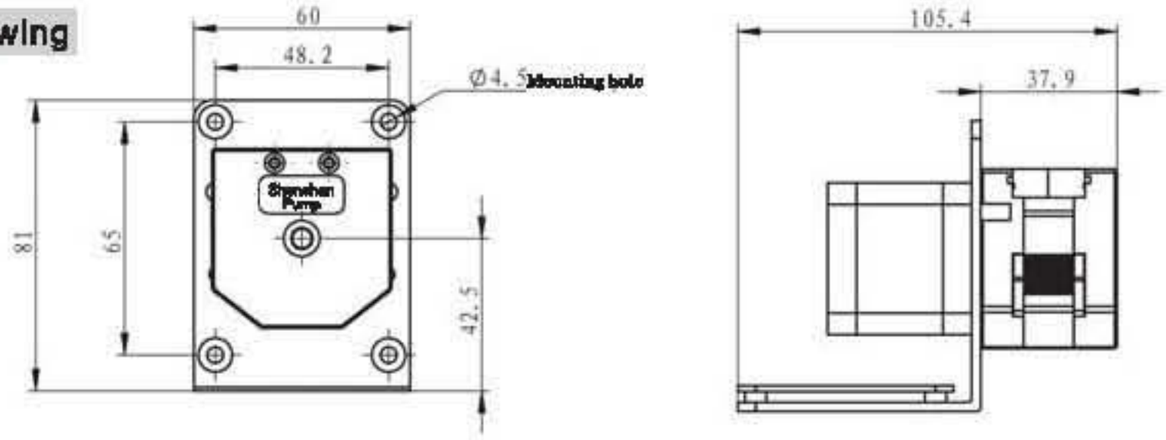

OEM-B013 Technical Specification

Speed range	0.1-300rpm
Flow rate range	0.0024-190ml/min
Communication interface	RS232,RS485 interface modbus protocol, control start/stop, direction and speed
Address setting	1–32
Motor type	42 stepper motor
Input voltage	DC 24V
Power	<30W

OEM-B014 Technical Specification

Speed range	0.1–300rpm
Flow rate range	0.12-190ml/min
Speed control	Different dial code to different speed 5-300rpm
External analog signal control	0–5V、0–10V、4–20mA 3 analog signal for option
External control	Start/stop,direction (external passive signal control)
Motor type	42 stepper motor
Input voltage	DC 24V
Power	<30W

CHROMalytic +61(0)3 9762 2034
TECHnology Pty Ltd
Australian Distributors
Importers & Manufacurers
www.chromtech.net.au
Website NEW : www.chromalytic.net.au E-mail : info@chromtech.net.au Tel: 03 9762 2034 . . . in AUSTRALIA

OEM Product

OEM-B02、OEM-B03

Outline dimensional drawing

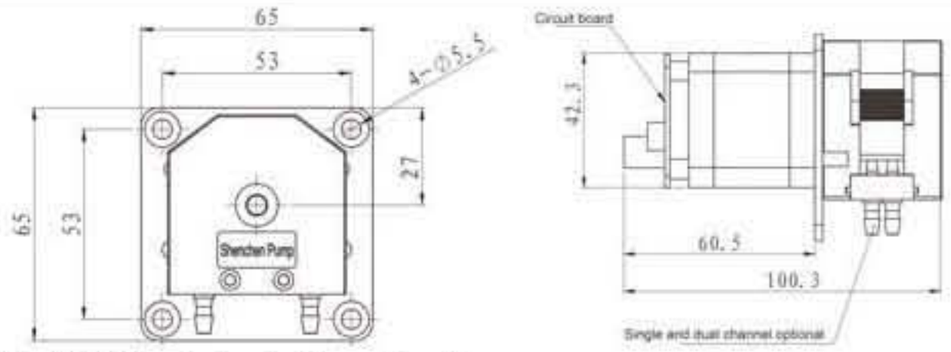

OEM-B02 Technical Specification

Speed range	0.1-300 rpm
Flow rate range	0.0024-190mL/min
Speed control	Preset speed or RS232 speed control
Subdivision settings	1/16
Motor type	42 stepper motor
Input voltage	DC 24V
Power	<24W

OEM-B03 Technical Specification

Speed range	0.1-300 rpm
Flow rate range	0.0024-190mL/min
Speed control	External input pulse frequency speed control
Multiple segments	1/16(recommend)、1、1/2、1/4、1/8、1/32、1/64、1/128
Motor type	42 stepper motor
Input voltage	DC 24V
Power	<24W

OEM-B136、OEM-B137

Outline dimensional drawing

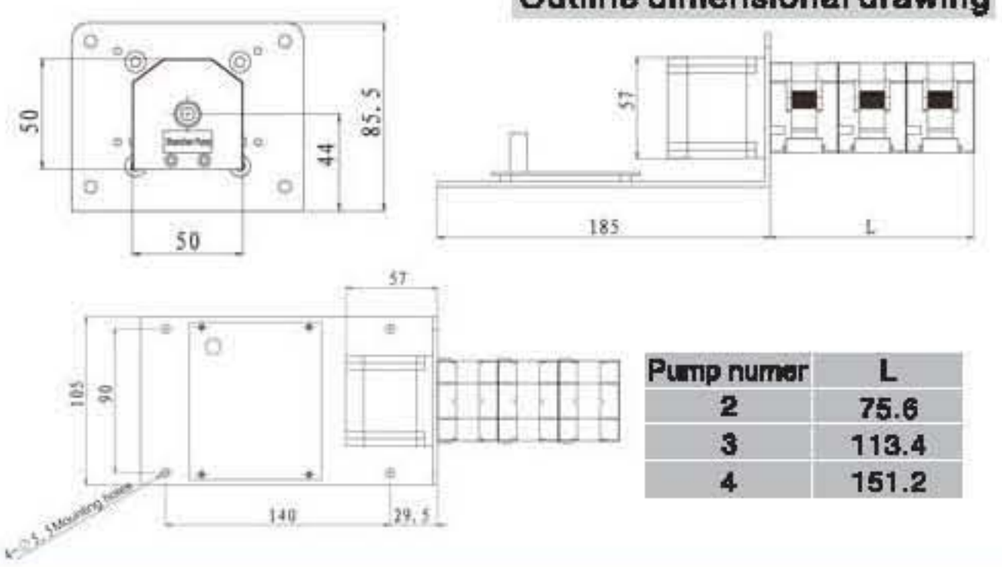

Pump numer	L
2	75.6
3	113.4
4	151.2

OEM-B136 Technical Specification

Speed range	0.1-300 rpm
Flow rate range	0.0024-190mL/min
Speed control	Preset speed or manual control
Control mode	External passive signal level (normally closed or open) mode; control the start/stop of direction
Display (optional)	0.96 inch OLED screen
Motor type	57 stepper motor
Input voltage	DC 24V
Power	<60W

OEM-B137 Technical Specification

Speed range	0.1-300 rpm
Flow rate range	0.0024-190mL/min
Speed control	Pulse frequency speed control
Logic input voltage	5V、12V、24V(default 5V)
Multiple segments	1/16(recommend)、1、1/2、1/4、1/8、1/32、1/64、1/128
Motor type	57 stepper motor
Input voltage	DC 24V
Power	<60W

Motor speed(rpm)	Flow rate ml/min (1mm wall thickness,dual channel)			
	ID 1mm	ID 2mm	ID 2.5mm	ID 3mm
5	0.25	0.90	1.28	1.78
10	0.49	1.84	2.59	3.52
15	0.74	2.76	3.85	5.30
25	1.25	4.57	6.43	8.80
40	2.00	7.31	10.25	14.02
50	2.52	9.14	12.78	17.47
75	3.76	13.64	19.04	26.12
100	5.03	18.17	25.42	35.34
200	10.12	36.45	51.27	71.44
250	12.63	45.75	64.34	88.35
300	15.01	54.63	76.84	106.39

Motor speed(rpm)	Flow rate ml/min (1.6mm wall thickness,single channel)			
	13# ID 0.8mm	14# ID 1.6mm	16# ID 3.1mm	25# ID 4.8mm
5	0.12	0.56	1.97	3.26
10	0.26	1.15	3.90	6.41
15	0.39	1.74	5.80	9.52
25	0.66	2.88	9.59	15.74
40	1.08	4.58	15.29	25.15
50	1.34	5.69	18.96	31.14
75	2.00	8.54	28.36	46.55
100	2.73	11.37	37.66	61.98
200	5.46	22.76	76.02	124.14
250	6.81	28.40	95.08	153.63
300	8.28	33.88	114.31	190.00

CHROMalytic +61(0)3 9762 2034
TECHnology Pty Ltd
Australian Distributors
Importers & Manufacurers
www.chromtech.net.au
Website NEW : www.chromalytic.net.au E-mail : info@chromtech.net.au Tel: 03 9762 2034 . . . in AUSTRALIA

OEM Product

OEM–B130 Series Patent No. ZL 2013 2 0435227.X

57 stepper motor

Outline dimensional drawing

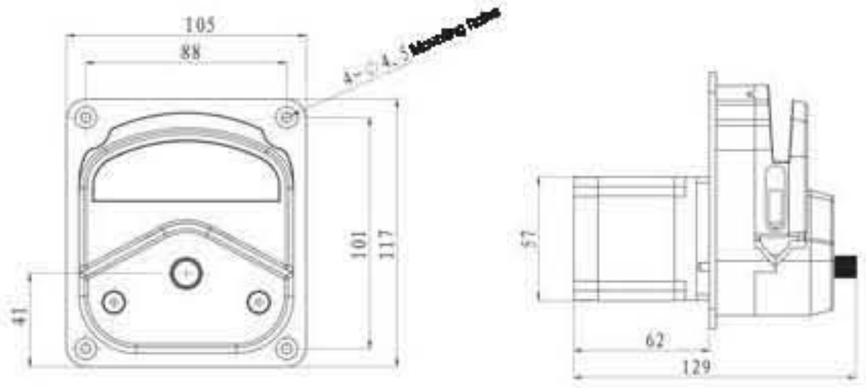

57 stepper motor

Outline dimensional drawing

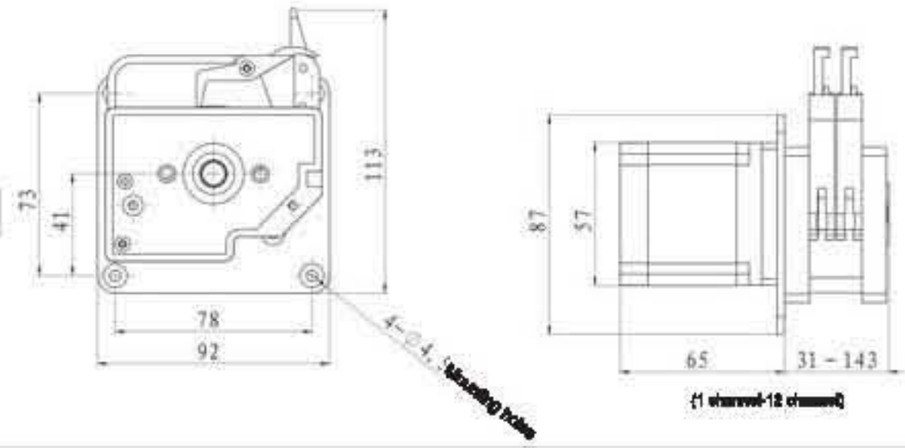

42 stepper motor

Outline dimensional drawing

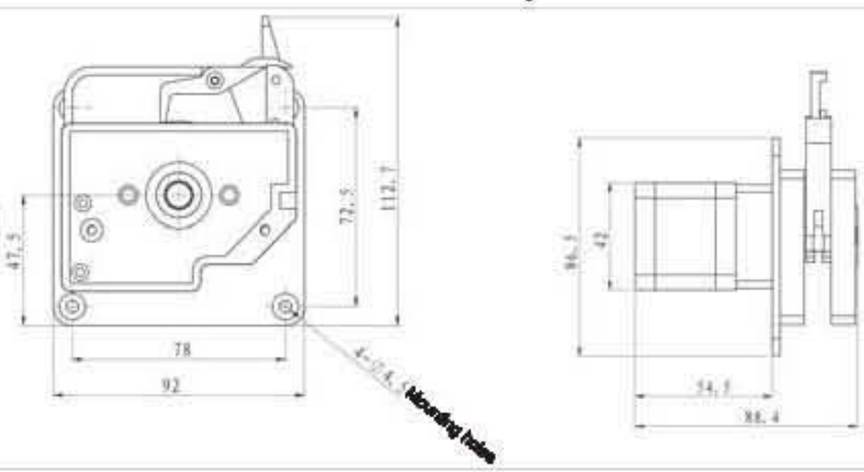

57 stepper motor

Outline dimensional drawing

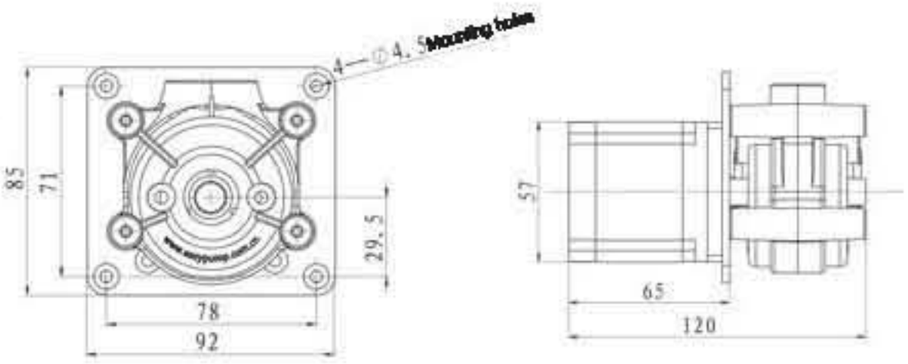

Speed range	≤350 rpm
Max flow rate	1330mL/min
Motor type	57 stepper motor/42 stepper motor
Motor phase number	2
Motor step angle	1.8°
Motor phase voltage	3.75V
Motor phase current	3.0A

Tubing&Flow rate

Pump head	Tubing	Flow rate (mL/min)
YZ1515x	13#、14#、19#、16#、25#、17#、18#	≤1330
YZ2515x	15#、24#	≤1015
MC1–MC8	ID: 0.13–3.17mm Wall thickness: 0.8–1mm	≤49(10 roller)、≤65(6 roller)
SN Series	14#、16#、24#	≤875

CHROMalytic +61(0)3 9762 2034
TECHnology Pty Ltd
Australian Distributors
Importers & Manufacurers
www.chromtech.net.au
Website NEW : www.chromalytic.net.au E-mail : info@chromtech.net.au Tel: 03 9762 2034 . . . in AUSTRALIA

OEM Product

OEM–B15 Series

Outline dimensional drawing

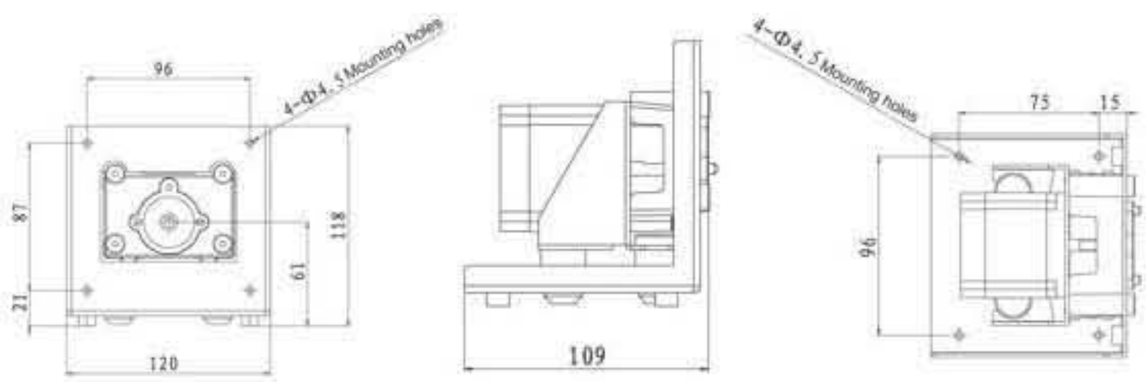

Suitable Pump Head

MC1～MC8

YZ1515x、YZ2515x

SN15、SN25

Speed range	≤350 rpm
Max flow rate	1330mL/min
Motor type	57 stepper motor
Motor phase number	2
Motor step angle	1.8
Motor phase voltage	3.75V
Motor phase current	3.0A

Tubing&Flow rate

Pump head	Tubing	Flow rate (mL/min)
YZ1515x	13#、14#、19#、16#、25#、17#、18#	≤1330
YZ2515x	15#、24#	≤1015
MC1–MC8	ID：0.13–3.17mm Wall thickness：0.8–1mm	≤32(10roller)、≤45(6roller)
SN Series	14#、16#、24#	≤875

User driven / speed type control board

PD03 Main board technical specification

Speed range	0.1–350 rpm
Speed control	Pulse frequency speed control
Logic input voltage	5V、12V、24V(default 5V)
Multiple segments	1/16(recommend)、1、1/2、1/4、1/8、1/32 1/64、1/128
Input voltage	DC 24V
Power	<60W
Dimension (L*W)	98.48×82.68 mm

PMD07 Main board technical specification

Speed range	0.1–350 rpm
Speed control	Preset speed or manual control
Control mode	External passive signal level (normally closed or open) mode; control the start/stop of direction
Display (optional)	0.96 inch OLED screen
Input voltage	DC 24V
Power	<60W
Dimension (L*W)	98.48×82.68 mm

CHROMalytic +61(0)3 9762 2034
TECHnology Pty Ltd
Australian Distributors
Importers & Manufacurers
www.chromtech.net.au
Website NEW : www.chromalytic.net.au E-mail : info@chromtech.net.au Tel: 03 9762 2034 . . . in AUSTRALIA

OEM Product

OEM Drive

Outline dimensional drawing

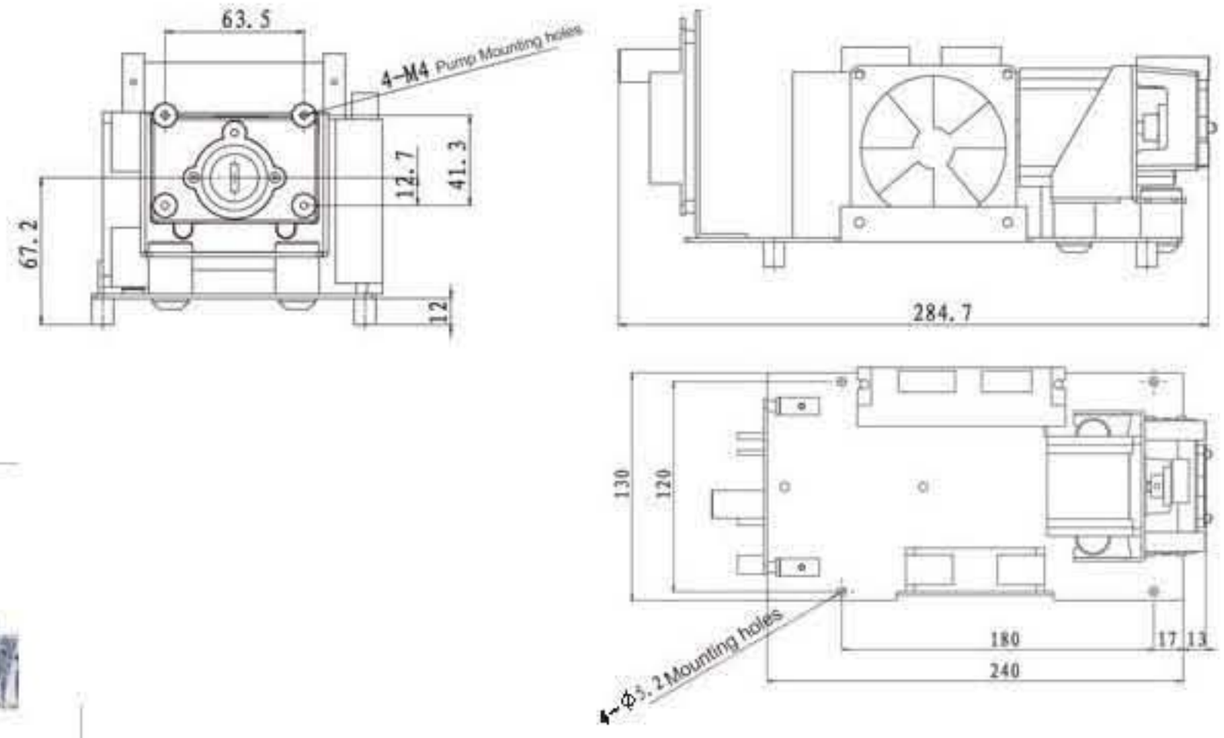

Suitable Pump Head

MC1～MC8

YZ1515x、YZ2515x

SN15、SN25

Pm01 Mainboard technical specification

Speed range	0.1–600 rpm(optional)
Flow rate range	0.000067–2280mL/mln
Speed resolution	0.1rpm
Display	0.96 inch OLED screen(optional)
Speed control	Preset speed or membrane keypad speed control (optional)
Control mode	membrane keypad
External control	Start/stop,change direction signal ;Active switch signal: 5V (standard)
Communication interface	RS485 support Modbus protocol (RTU mode)
External control speed	0–5V、0–10V、4–20mA(optional)
Motor type	57 stepper motor
Input voltage	24V
Power	<60W

Pm02 Mainboard technical specification

Speed range	0.1–600 rpm(optional)
Flow rate range	0.000067–2280mL/mln
Speed resolution	0.1rpm
Display	0.96 inch OLED screen(optional)
Speed control	Preset speed or membrane keypad speed control (optional)
Control mode	Toggle switch
External control	Start/stop;Active switch signal: 5V (standard)
Communication interface	RS485 support Modbus protocol (RTU mode)
External control speed	0–5V、0–10V、4–20mA(optional)
Motor type	57 stepper motor
Input voltage	24V
Power	<60W

Tubing&Flow rate

OEM Drive		Pump head & Flow rates (mL/min)						
		YZ1515x	YZ2515x	MC1~MC12(10)	MC1~MC12(6)	SN25	SN15–14	SN15–16
OEM Number (main board)&rotation speed / Tubing		13#、14#、19#、16# 25#、17#、18#	15#、24#	Inner diameter: 0.13–3.17mm Wall thickness: 0.86–1mm		24#	14#	16#
OEM–B145(PM01)	0.1–150rpm	0.007~570	0.17~435	0.000067–49 (suggest working rotating speed ≤150rpm)	0.00008–65 (suggest working rotating speed ≤150rpm)	0.25～375	0.024～36	0.088～132
OEM–B147(PM02)								
OEM–B146(PM01)	0.1–350rpm	0.007~1330	0.17~1015			0.25～875	0.024～84	0.088～308
OEM–B148(PM02)								
OEM–B221(PM01)	0.1–600rpm	0.007~2280	0.17~1740			0.25～1500	0.024～144	0.088～528
OEM–B222(PM02)								

CHROMalytic +61(0)3 9762 2034
TECHnology Pty Ltd
Australian Distributors
Importers & Manufacurers
www.chromtech.net.au
Website NEW : www.chromalytic.net.au E-mail : info@chromtech.net.au Tel: 03 9762 2034 . . . in AUSTRALIA

OEM Product

OEM–Z Series

outline dimensional drawing

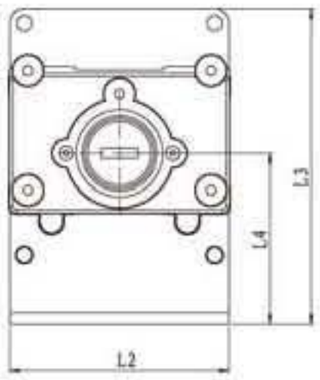

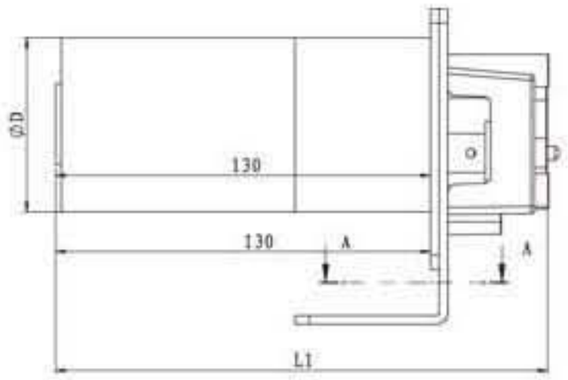

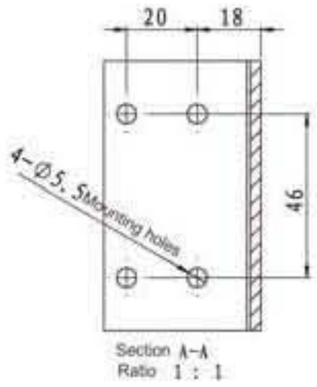

Suitable Pump Head

MC1～MC12

YZ1515x、YZ2515x

SN15、SN25

Product model	Install method	Speed (rpm)	Speed error	Suitable power	Motor type	Work environment
OEM–Z101	L shape connection plate	60	±10%	DC 12V/15W	Ø 60 DC geared motor	0–40℃
OEM–Z102	L shape connection plate	100				
OEM–Z103	L shape connection plate	166				
OEM–Z104	L shape connection plate	200				
OEM–Z105	L shape connection plate	240				
OEM–Z106	L shape connection plate	333				
OEM–Z107	L shape connection plate	400				
OEM–Z108	L shape connection plate	500				
OEM–Z109	L shape connection plate	600				
OEM–Z110	———	60				
OEM–Z111	L shape connection plate	60		DC 24V/15W		
OEM–Z112	L shape connection plate	100				
OEM–Z113	L shape connection plate	166				
OEM–Z114	L shape connection plate	200				
OEM–Z115	L shape connection plate	240				
OEM–Z116	L shape connection plate	333				
OEM–Z117	L shape connection plate	400				
OEM–Z118	L shape connection plate	500				
OEM–Z119	L shape connection plate	600				
OEM–Z201	L shape connection plate	60	±10%	DC 12V/25W	Ø 70 DC geared motor	
OEM–Z202	L shape connection plate	100				
OEM–Z203	L shape connection plate	150				
OEM–Z204	L shape connection plate	200				
OEM–Z205	L shape connection plate	300				
OEM–Z206	L shape connection plate	450				
OEM–Z207	L shape connection plate	500				
OEM–Z208	L shape connection plate	600				
OEM–Z211	L shape connection plate	60		DC 24V/25W		
OEM–Z212	L shape connection plate	100				
OEM–Z213	L shape connection plate	150				
OEM–Z214	L shape connection plate	200				
OEM–Z215	L shape connection plate	300				
OEM–Z216	L shape connection plate	450				
OEM–Z217	L shape connection plate	500				
OEM–Z218	L shape connection plate	600				
OEM–Z301	L shape connection plate	600	±10%	DC 24V/30W	Ø 60 DC motor	
OEM–Z401	L shape connection plate	500	±10%	DC 24V/40W	Ø 80 DC motor	

Tubing&Flow rate

Pump head	Tubing	Flow rate (mL/min)
YZ1515x	13#、14#、19#、16#、25#、17#、18#	<2280
YZ2515x	15#、24#	<1740
MC	ID: 0.13–3.17mm Wall thickness: 0.86–1mm	<45
SN Series	14#、16#、24#	<1500

CHROMalytic +61(0)3 9762 2034
TECHnology Pty Ltd
Australian Distributors
Importers & Manufacurers
www.chromtech.net.au
Website NEW : www.chromalytic.net.au E-mail : info@chromtech.net.au Tel: 03 9762 2034 . . . in AUSTRALIA

OEM Product

OEM-J Series

Outline dimensional drawing

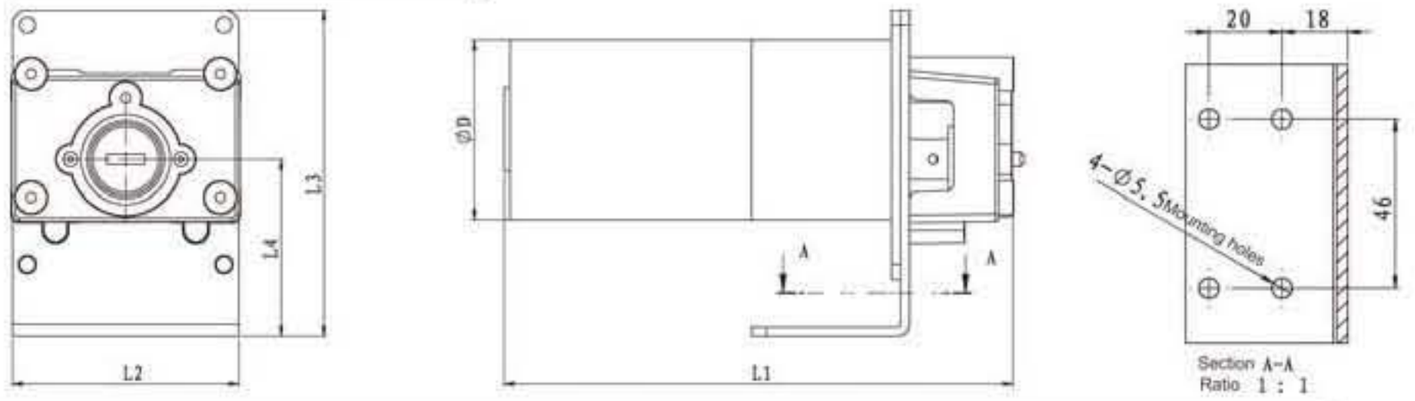

Suitable Pump Head

MC1～MC12 | YZ1515x、YZ2515x | SN15、SN25 | DZ25-3L | DZ25-6L

OEM-J

Product model	Install method	Speed (rpm)	Speed error	Suitable power	Motor type	Work environment
OEM-J01	L shape connection plate	60	±10%	AC 220V/10W	Ø 60 AC geared motor	0-40℃
OEM-J02	L shape connection plate	100				
OEM-J03	L shape connection plate	166				
OEM-J04	L shape connection plate	200				
OEM-J05	L shape connection plate	300				
OEM-J06	L shape connection plate	417				
OEM-J08	L shape connection plate	60	±10%	AC 220V/15W	Ø 70 AC geared motor	
OEM-J09	L shape connection plate	100				
OEM-J010	L shape connection plate	166				
OEM-J011	L shape connection plate	200				
OEM-J012	L shape connection plate	300				
OEM-J013	L shape connection plate	417				
OEM-J015	L shape connection plate	60	±10%	AC 220V/25W	Ø 80 AC geared motor	
OEM-J016	L shape connection plate	120				
OEM-J017	L shape connection plate	300				
OEM-J018	L shape connection plate	500				
OEM-J019	L shape connection plate	60	±10%	AC 220V/60W	Ø 90 AC geared motor	
OEM-J020	L shape connection plate	120				
OEM-J021	L shape connection plate	300				
OEM-J022	L shape connection plate	500				

OEM-JT

Product model	Install method	Speed range (rpm)	Speed error	Suitable power	Motor type	Work environment
OEM-JT01	L shape connection plate	0~60	±10%	AC 220V/15W	Ø 70 AC geared motor	0-40℃
OEM-JT02	L shape connection plate	0~120				
OEM-JT03	L shape connection plate	0~300				
OEM-JT04	L shape connection plate	0~500				
OEM-JT05	L shape connection plate	0~60	±10%	AC 220V/25W	Ø 80 AC geared motor	
OEM-JT06	L shape connection plate	0~120				
OEM-JT07	L shape connection plate	0~300				
OEM-JT08	L shape connection plate	0~500				
OEM-JT09	L shape connection plate	0~60	±10%	AC 220V/60W	Ø 90 AC geared motor	
OEM-JT10	L shape connection plate	0~120				
OEM-JT11	L shape connection plate	0~300				
OEM-JT12	L shape connection plate	0~500				

Tubing&Flow rate

Pump head	Tubing	Flow rate (mL/min)
YZ1515x	13#、14#、19#、16#、25#、17#、18#	<1900
YZ2515x	15#、24#	<1450
MC	ID: 0.13-3.17mm Wall thickness: 0.8-1mm	<45
SN Series	14#、16#、24#	<1250
DZ25-3L	15#、24#、35#、36#	<3000
DZ25-6L	15#、24#、35#、36#	<5000

CHROMalytic +61(0)3 9762 2034
TECHnology Pty Ltd
Australian Distributors
Importers & Manufacurers
www.chromtech.net.au
Website NEW : www.chromalytic.net.au E-mail : info@chromtech.net.au Tel: 03 9762 2034 . . . in AUSTRALIA

Peristaltic Pump Tubing

Silicone Tubing

Platinum-Cured Silicone Tubing

Slightly clarity, smooth surface, low protein binding levels, fewer potential leachable .
Ideal for pharmaceutical and biotechnology use, suitable temperature range -51~238 ℃.

Micro Flow Rates Tubing

Tubing sizes		0.13×0.86	0.5×0.86	0.86×0.86	1.52×0.86	2.06×0.86	2.4×0.86	2.79×0.86	3.17×0.86	1×1	2×1	3×1
Tubing cross sections (1:1)												
Wall thickness (mm)		0.86								1.0		
Inside diameter (mm)		0.13	0.5	0.86	1.52	2.06	2.4	2.79	3.17	1.0	2.0	3.0
Maximum pressure (Mpa)	Continuous	0.1										
	Intermittent	0.1										

Basic Flow Rates Tubing

Tubing sizes		13#	14#	19#	16#	25#	17#	18#	15#	24#	35#	36#
Tubing cross sections (1:1)		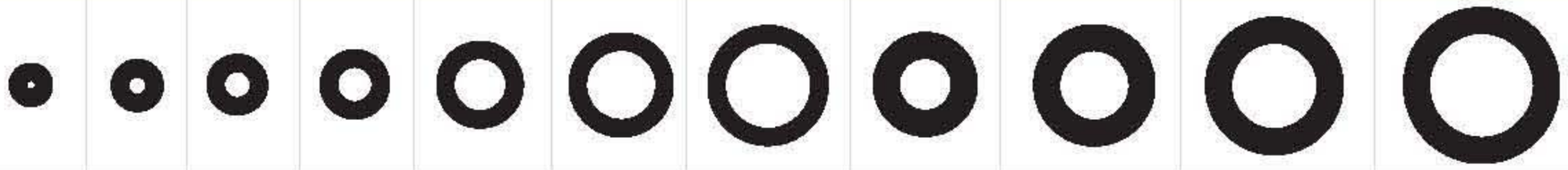										
Wall thickness (mm)		1.6							2.4			
Inside diameter (mm)		0.8	1.6	2.4	3.1	4.8	6.4	7.9	4.8	6.4	7.9	9.6
Maximum pressure (Mpa)	Continuous	0.17				0.14	0.1	0.07	0.17		0.14	
	Intermittent	0.27				0.24	0.14	0.1	0.27		0.24	

Industral Tubing

Tubing sizes		26#	73#	82#	86#	90#	88#	92#
Tubing cross sections (1:1)		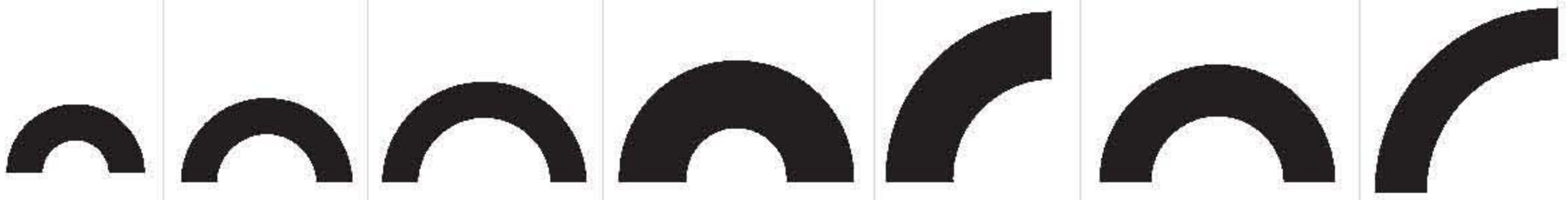						
Wall thickness (mm)		3.3			6.3		4.8	
Inside diameter (mm)		6.4	9.6	12.7	9.5	19	12.7	25.4
Maximum pressure (Mpa)	Continuous	0.2			0.25			
	Intermittent	0.27			0.3			

CHROMalytic +61(0)3 9762 2034
TECHnology Pty Ltd
Australian Distributors
Importers & Manufacurers
www.chromtech.net.au
Website NEW : www.chromalytic.net.au E-mail : info@chromtech.net.au Tel: 03 9762 2034 . . . in AUSTRALIA

Peristaltic Pump Tubing

SAINT-GOBAIN Tubing　　Tygon、PharMed BPT、Norprene etc

	A Tygon3350	B Tygon R-3603	C Norprene Chemical	D PharMed	E Norprene A-60-F
Formulation	Tygon3350	Tygon R-3603	Norprene Chemical	PharMed	Norprene A-60-F
Application	Pharmaceutical, cosmetic, medical and autoanalysis application.	General laboratory, food & beverage, biopharmaceutical, analytical instruments.	Elcellent for chemical processing and general industrial applications. Food and beverage applications where extractables are a concern.	Cell and tissue culture work and pharmaceutical uses. Also good for light-sensitive samples.	Ideal for the food, dairy and beverage.
Advantages	Ultra-smooth; minimizes bacterial growth. Good for mild to medium concentration bases, salts and alcohols; odorless, tasteless, and nontoxic. Transparent.	Inexpensive tubing for general lab application. Nonaging,nonoxidizing. Clear for easy flow monitoring. Handles virtually all inorganic chemicals. Low gas permeability. Smooth bore; good for viscous fluids. High dielectric constant.	Norprene thermoplastic elastomer outer jacket with chemically inert Tygon® 2075 inner bore for excellent chemical resistance. Plasticizer-free to guard against extractables. Long flex life. Opaque beige.	Great for tissue and cell work-nontoxic and nonhemolytic; long service life minimizes risk of fluidexposure; reduces tubing costs and pump downtime. Opaque to UV and visible light to protect light-sensitive fluids. Heat sealable, bondable, and formable. Extremely low gas permeability.	Heat, ozone, and UV light resistant. Nonaging; nonoxidizing; superior acid and alkali resistance. Opaque beige.
Application Suitability	———	ACIDS GOOD ALKALIES GOOD ORGANIC SOLVENTS NO PRESSURE GOOD VACUUM GOOD VISCOUS FLUIDS EXCELLENT STERILE FLUIDS GOOD	———	ACIDS GOOD ALKALIES GOOD ORGANIC SOLVENTS NO PRESSURE GOOD VACUUM EXCELLENT VISCOUS FLUIDS GOOD STERILE FLUIDS EXCELLENT	———
Physical characteristics	———	Thermoplastic. PVC-based material with plasticizer. Firm (stiff) material. Transparent, clear.	———	Thermoplastic elastomer. Polypropylene-based material with USP mineral oil. Excellent tensile strength. Firm(stiff) material. Opaque, beige.	———
Temp. range	−75 to 450°F (−60~232°C)	−58 to 165°F (−50~74°C)	−76 to 165°F (−60~74°C)	−60 to 270°F (−59~135°C)	−60 to 275°F (−51~135°C)
Meets classifications	FDA 21 CFR 177.2600 USP Class VI EP 3.1.9. Exceeds 3A standards Manufactured according to GMP.	FDA 21 CFR 175.300	None.	None.	FDA 21 CFR 177.2600 NSF listed (Standard 51) Manufactured according to GMP.
Cleaning/ Sterilization	Ethylene oxide gamma irradiation, or autoclave for 30 min, 15psi (1 bar).	Unaffected by commercial sanitizers (with recommended procedures) Sterilize with ethylene oxide (ETO) or autoclave. To autoclave: Coil loosely in nonlinting cloth or paper, autoclave at 121°C (250°F). 1KG/cm² (15psi) for 30 minutes (tubing will appear milky); air dry at max 66°C (150°F) for 2 to 2 ½ hours until clear.	Sterilize with ethylene-oxide(ETO), autoclave or gamma irradiation up to 2.5Mrad. Repeated autoclaving will not affect overall life.	Autoclave, ethylene oxide, or gamma irradiation.	Autoclave.

CHROMalytic TECHnology Pty Ltd +61(0)3 9762 2034
Australian Distributors
Importers & Manufacurers
www.chromtech.net.au
Website NEW : www.chromalytic.net.au E-mail : info@chromtech.net.au Tel: 03 9762 2034 . . . in AUSTRALIA

GLOBAL BUSINESS

SHENCHEN

NO.1