GAS PURIFICATION

SUPER-CLEAN Filters

RESTEK®

Click In-line

"GETTER" Systems

Super-Clean™

Gas Filters from Restek

RESTEK

CHROMalytic +61(0)3 9762 2034
ECHnology Pty Ltd
Australian Distributors; Importers & Manufacturers

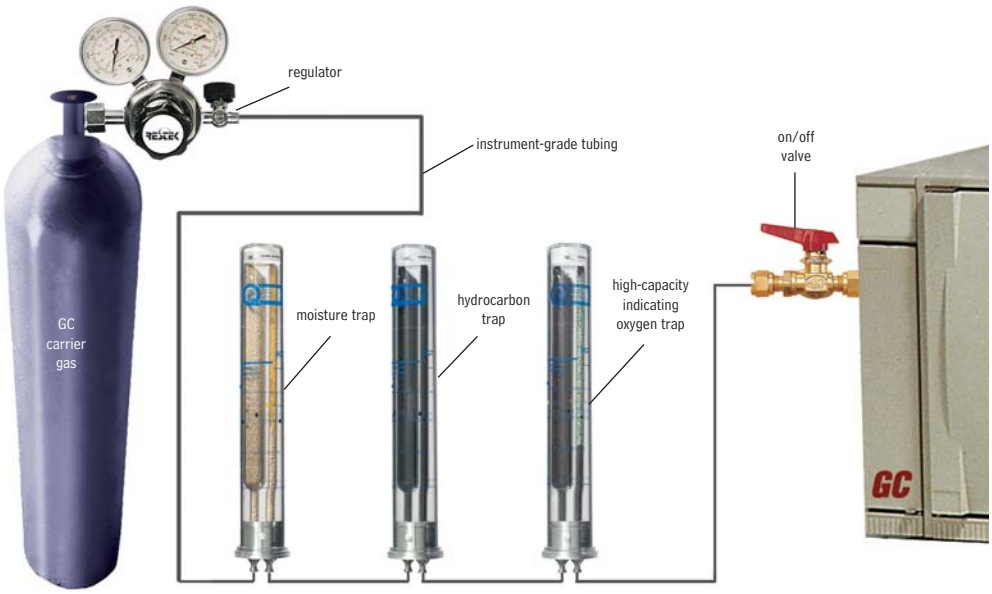

Why do I need to use traps and where should I install them?

Carrier gas must contain less than 1ppm of oxygen, water vapor, or any other trace contaminant, to prevent column degradation, shortened column lifetime, and increased stationary phase bleed. Contaminants cause ghost peaks to appear during temperature programming and degrade the validity of analytical data. Make-up gas also should be contaminant-free, or baseline fluctuations and excessive detector noise can occur; detector gases should be free of water and hydrocarbons, or excessive baseline noise can result. Gas purifiers remove these contaminants from gas sources, thereby improving system performance.

Moisture Removal

Moisture in carrier gas lines will prematurely degrade oxygen and hydrocarbon traps and increase detector noise (particularly with ECDs). As a precaution, we highly recommend installing a moisture trap before the hydrocarbon and oxygen traps on all carrier gas lines. Our favorite trap is the Super-Clean™ Ultra-High Capacity Moisture Filter (cat.# 22028).

Hydrocarbon Removal

Use a hydrocarbon trap if your gas has a potential source of hydrocarbon contaminants (e.g., an oil pump in an air compressor) or if you suspect you are observing carrier gas ghost peaks. Install the hydrocarbon trap after the moisture trap, to prevent moisture from degrading the hydrocarbon-trapping ability of the activated carbon in the hydrocarbon trap. We recommend the Super-Clean™ Ultra-High Capacity Hydrocarbon Filter (cat.# 22030).

Oxygen Removal

Oxygen is a column killer. It is present even in UHP gases, as minute leaks at fittings allow oxygen to influx against the concentration gradient. There are many choices for oxygen removal—the Super-Clean™ Ultra-High Capacity Oxygen Filter (cat.# 22029) is popular with Restek chemists. Because oxygen can enter a gas line at any fitting, the oxygen trap should be the last connection before the gas line enters the chromatograph.

tech tip

Carrier Gas Purity

Carrier gas should contain less than 1ppm of oxygen, moisture, or other trace contaminants, to prevent column degradation, increase column lifetime, and decrease stationary phase bleed.

The expense of using high-purity gases in combination with carrier gas line purifiers will be offset by longer column lifetime and less GC maintenance.

did you know?

Trap replacement made simple!

Try the Super-Clean™ Triple Filter Carrier Gas Cleaning Kit (cat.# 22019) that removes moisture, hydrocarbons, and oxygen in one easy-to-change, economical cartridge.

Super-Clean™ Gas Filters

- High-purity output ensures 99.9999% pure gas.
- "Quick connect" fittings for easy, leak-tight cartridge changes.
- Glass inside to prevent diffusion; plastic outside for safety.

Designed for fast, simple cartridge changing

Cartridge systems make changing gas filters quick and easy, and Super-Clean™ gas filters are the latest in cartridge-style gas filtration. A baseplate allows cartridges to be exchanged without introducing oxygen. Spring-loaded check valves seal when a filter is removed and open only when a new filter has been locked in place. There is no longer a need for loosening and tightening fittings every time a trap is changed, and your system will not become contaminated during the process.

With available 2- or 3-position baseplates, you can purify all GC gas streams at one location. Figure 1 shows some possible filter cartridge combinations using these baseplates. Any combination is possible because any Super-Clean™ filter cartridge can be used with any baseplate.

High-purity output for improved sensitivity (Table I)

The Triple Filter cartridge (cat.# 22020) is ideal for purifying carrier gas. This trap contains oxygen, moisture, and hydrocarbon scrubbers in one cartridge. The purity of your carrier gas after flowing through the Triple Filter is better than six-9s (99.9999% pure), which is ideal for sensitive mass spectrometry (MS) or ECD analyses, and for protecting your analytical columns against damage from contaminated carrier gas.

The Fuel Gas Filter cartridge (cat.# 22022) is perfect for purifying flame ionization detector (FID) fuel gases, removing both moisture and hydrocarbons. Using the Fuel Gas Filter for FID hydrogen and air will produce a stable baseline, improving overall reproducibility and sensitivity.

did you know?

All Super-Clean™ filter cartridges (except hydrocarbon filter cat.# 22030) feature easy-to-read indicators. The indicator code is shown on every trap so there is no confusion about when to replace it.

Figure 1 Filter cartridges can be configured for different applications.

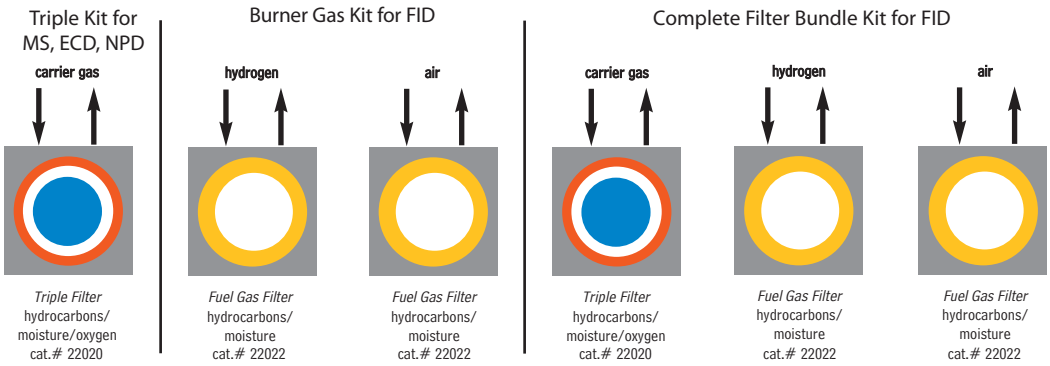

tech tip

Oxygen and Moisture Traps
We highly recommend oxygen and moisture traps for make-up gas when operating sensitive detectors such as electron capture detectors (ECD). The hydrogen reaction gas for sensitive electrolytic conductivity detectors (ELCD) also requires a hydrocarbon trap, to remove trace impurities.

Table I Each Super-Clean™ filter provides high-purity outlet gas.

Type of Filter	Outlet Gas Quality (%)	Maximum Pressure/ Maximum Flow Rates	Use for:	Indicator Color Change	Capacity H_2O (g)	Capacity O_2 (mL)	Capacity Hydrocarbons (g)	Estimated Lifetime (years)
Moisture cat.# 22028	>99.9999	11 bar 159psi/ 7 L/min.	Inert carrier gas Air Hydrogen	Yellow to clear	7.2	—	—	>2
Oxygen cat.# 22029	>99.9999	11 bar 159psi/ 7 L/min.	Inert carrier gas	Green to grey	NA	1000	—	>2
Hydrocarbons cat.# 22030	>99.9999	11 bar 159psi/ 7L/min.	Inert carrier gas Air Hydrogen	No indicator	NA	—	12[3]	>2
Fuel Gas[1] cat.# 22022	>99.9999	11 bar 159psi/ 7L/min.	Inert carrier gas Air Hydrogen	Yellow to clear	3.5	—	24[3]	>1.5
Triple[2] cat.# 22020	>99.9999	11 bar 159psi/ 7L/min.	Inert carrier gas	Yellow to clear Green to grey	1.8	500	4[3]	>1
Helium Specific[2] cat.# 21982	>99.9999	11 bar 159psi/ 7L/min.	Helium	Yellow to clear Green to grey	1.8	500	—	>1

[1]Removes hydrocarbons, moisture.
[2]Removes hydrocarbons, moisture, oxygen.
[3]As *n*-butane.

All traps measure: 10⅝" x 1¾"
(27 x 4.4 cm)
Each baseplate unit measures:
4" x 4" x 1⅞"
(10.2 x 10.2 x 4.8 cm)

Super-Clean™ Filter and Baseplate Kits

Description	qty.	cat.#
Carrier Gas Cleaning Kit (includes mounting baseplate, ⅛" inlet/outlet fittings, and oxygen/moisture/hydrocarbon Triple Filter)	kit	22019
Fuel Gas Purification Kit (includes mounting baseplate, ⅛" inlet/outlet fittings, and hydrocarbon/moisture Fuel Gas Filter)	kit	22021

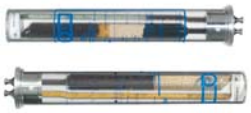

Replacement Filters

Description	qty.	cat.#
Replacement Triple Filter (removes oxygen, moisture and hydrocarbons)	ea.	22020
Replacement Fuel Gas Filter (removes moisture and hydrocarbons)	ea.	22022

Filter Bundle Kit

- Kit includes two Fuel Gas Filters for FID fuel gases and one Triple Filter for carrier gas.

Description	qty.	cat.#
Filter Bundle Kit	kit	22031

Super-Clean™ Ultra-High Capacity Filters

Description	qty.	cat.#
Ultra-High Capacity Hydrocarbon Filter	ea.	22030
Ultra-High Capacity Moisture Filter	ea.	22028
Ultra-High Capacity Oxygen Filter	ea.	22029

Helium-Specific Super-Clean™ Filter and Kit

- Specifically designed for purification of helium in GC/MS systems.
- Traps are packed and conditioned using helium.
- Uses standard single-position baseplate.

Description	qty.	cat.#
Helium-Specific Carrier Gas Cleaning Kit (includes mounting baseplate, ⅛" inlet/outlet fittings, and oxygen/moisture/hydrocarbon Helium-Specific Filter)	kit	21983
Replacement Helium-Specific Filter (removes oxygen, moisture and hydrocarbons)	ea.	21982

Baseplates

- Standard baseplate fittings are ⅛". To adapt to ¼", order ⅛" to ¼" tube-end unions (cat. # 21833, next page).

Description	qty.	cat.#
Single-Position Baseplate	ea.	22025
2-Position Baseplate	ea.	22026
3-Position Baseplate	ea.	22027

Wall Mounting Bracket

Baseplates can be mounted by using screws and the mounting holes on the baseplate, or by using this optional wall mounting bracket.

Description	qty.	cat.#
Wall Mounting Bracket for Super-Clean™ Baseplates	ea.	21984

Replacement O-Rings for Cartridge Baseplates

Pack includes 10 large O-rings and 10 small O-rings.

Description	qty.	cat.#
Replacement O-Rings for Cartridge Baseplates	20-pk.	22023

1/8-Inch to 1/4-Inch Tube-End Unions

To adapt 1/8" Super-Clean™ baseplate fittings to 1/4", use 1/8" to 1/4" tube-end unions.

Description	qty.	cat.#
1/8" to 1/4" Tube-End Unions	5-pk.	21833

Super-Clean™ Gas Trapping System for LC/MS

Quick-change cartridge system for removing hydrocarbon impurities from nitrogen

- Changing filters is quick and easy.
- Up to 20L of hydrocarbon-free nitrogen per minute.

The Super-Clean™ Gas Trapping System is the latest technology in cartridge-style gas filtration for purifying nitrogen, and is ideal for use in LC/MS systems. The two-position baseplate (installed in the gas line) allows cartridges to be exchanged without introducing oxygen into the system. Spring-loaded check valves seal when a cartridge is removed and open only when a new cartridge has been locked in place. There is no need for loosening and tightening fittings every time you change cartridges, and your system cannot become contaminated during the changing process.

To meet the high flow needs of the LC/MS system, the charcoal-filled cartridges are positioned and connected in parallel. The incoming gas stream is split equally between the cartridges, and the two streams are rejoined after purification but before the gas exits the baseplate. This approach allows longer contact between the nitrogen and the adsorbent, ensuring higher gas purity and eliminating a potential source of contaminants to your analyses.

A handy date wheel, included with the system, indicates the cartridge installation date and the recommended replacement date.

20L of purified nitrogen per minute!

Table I Super-Clean™ Filters provide high-purity outlet gas

Type of filter	Max. Flow	Outlet Gas Quality %	Maximum Pressure	Estimated Lifetime
Hydrocarbon (charcoal)	20L/min.	99.9999%	11 bar/159psi	3 to 6 months

Description	qty.	cat.#
Super-Clean™ Gas-Trapping System (2-position baseplate, 2 charcoal filters)	ea.	22062
2-Position Baseplate (1/4" Fittings)	ea.	22060
Replacement Hydrocarbon (Charcoal) Filters	2-pk.	22061

Click-On Inline Super-Clean™ Traps

- High-purity output ensures 99.9999% pure gas.
- Click-On fittings for easy, leak-tight cartridge changes; brass or stainless steel, 1/4" or 1/8".
- Helium-Specific Triple Trap is ideal for GC/MS.

Using the same features and benefits as the Super-Clean™ base-plates and filters, SGT designed an inline trap. Click-On adaptor connectors allow cartridges to be exchanged without introducing oxygen. Spring-loaded check valves seal when a filter is removed and open only when a new filter has been locked in place. There is no need for loosening and tightening fittings every time a trap is changed, and your system will not become contaminated during the process.

The Triple Trap is ideal for purifying carrier gas—it contains oxygen, moisture, and hydrocarbon scrubbers in one cartridge.

please **note**

NOTE: Super-Clean™ Gas Filters are recommended for purifying non-corrosive gases with low concentrations of contaminants. The maximum concentration of oxygen in the incoming gas stream for oxygen purifiers is 0.5%.

The Fuel Gas Trap is ideal for purifying flame ionization detector (FID) fuel gases, removing both moisture and hydrocarbons.

The Helium-Specific Triple Trap is ideal for purifying helium in GC/MS systems. This trap is packed and purged under helium and contains oxygen, moisture, and hydrocarbon scrubbers in one cartridge.

Trap replacement depends on the quality of the incoming gas. Use the double connector and install an indicating cartridge after a trap to indicate when the trap should be replaced.

Filter Type	Gas Quality at Outlet	Maximum Pressure	Maximum Flow (L/min.)	Use For	H_2O (g)	Capacity O_2 (mL)	Hydrocarbons (g)	Estimated Lifetime (years)
Moisture cat.#22467	>99.9999	11 bar 160psi	25	Inert carrier gas, helium, air, H_2	21	NA	NA	>3
Oxygen cat.#22468	>99.9999	11 bar 160psi	25	Inert carrier gas	NA	3000	NA	>3
Hydrocarbon cat.#22466	>99.9999	11 bar 160psi	25	Inert carrier gas, helium, air, H_2	NA	NA	36[3]	>3
Fuel Gas[1] cat.#22465	>99.9999	11 bar 160psi	25	Inert carrier gas, helium, air, H_2	10	NA	18[3]	>2
Triple[2] cat.#22464	>99.9999	11 bar 160psi	25	Inert carrier gas	6	1000	12[3]	>2

[1]Removes hydrocarbons, moisture.
[2]Removes hydrocarbons, moisture, oxygen.
[3]As *n*-butane.

Click-On Inline Super-Clean™ Traps and Connector Kits

Description	qty.	cat.#
Carrier Gas Purification Kit, 1/8" Stainless Steel Includes (2) 1/8" SS connectors and (1) oxygen/moisture/hydrocarbon triple trap	kit	22456
Carrier Gas Purification Kit, 1/8" Brass Includes (2) 1/8" brass connectors and (1) oxygen/moisture/hydrocarbon triple trap	kit	22457
Carrier Gas Purification Kit, 1/4" Stainless Steel Includes (2) 1/4" SS connectors and (1) oxygen/moisture/hydrocarbon triple trap	kit	22458
Carrier Gas Purification Kit, 1/4" Brass Includes (2) 1/4" brass connectors and (1) oxygen/moisture/hydrocarbon triple trap	kit	22459
Fuel Gas Purification Kit, 1/8" Stainless Steel Includes (4) 1/8" SS connectors and (2) hydrocarbon/moisture traps	kit	22460
Fuel Gas Purification Kit, 1/8" Brass Includes (4) 1/8" brass connectors and (2) hydrocarbon/moisture traps	kit	22461
Fuel Gas Purification Kit, 1/4" Stainless Steel Includes (4) 1/4" SS connectors and (2) hydrocarbon/moisture traps	kit	22462
Fuel Gas Purification Kit, 1/4" Brass Includes (4) 1/4" brass connectors and (2) hydrocarbon/moisture traps	kit	22463

Wall-Mounting Clamps for Click-On Inline Super-Clean™ Traps

Description	qty.	cat.#
Wall-Mounting Clamps for Click-On Inline Super-Clean™ Traps	4-pk.	22480

Click-On Inline Super-Clean™ Replacement Traps

Description	qty.	cat.#
Click-On Super-Clean™ Replacement Triple Trap (removes oxygen, moisture and hydrocarbons)	ea.	22464
Click-On Super-Clean™ Replacement Fuel Gas Trap (removes moisture and hydrocarbons)	ea.	22465

Click-On Inline Super-Clean™ Ultra-High Capacity Traps

Description	qty.	cat.#
Ultra-High Capacity Hydrocarbon Trap	ea.	22466
Ultra-High Capacity Moisture Trap	ea.	22467
Ultra-High Capacity Oxygen Trap	ea.	22468

Helium-Specific Click-On Inline Super-Clean™ Trap and Connector Kits

Description	qty.	cat.#
Kits		
Helium-Specific Carrier Gas Cleaning Kit, 1/8" Stainless Steel Includes (2) 1/8" SS connectors and (1) oxygen/moisture/hydrocarbon helium-specific triple trap	kit	22469
Helium-Specific Carrier Gas Cleaning Kit, 1/8" Brass Includes (2) 1/8" brass connectors and (1) oxygen/moisture/hydrocarbon helium-specific triple trap	kit	22470
Helium-Specific Carrier Gas Cleaning Kit, 1/4" Stainless Steel Includes (2) 1/4" SS connectors and (1) oxygen/moisture/hydrocarbon helium-specific triple trap	kit	22471
Helium-Specific Carrier Gas Cleaning Kit, 1/4" Brass Includes (2) 1/4" brass connectors and (1) oxygen/moisture/hydrocarbon helium-specific triple trap	kit	22472
Replacement Trap		
Helium-Specific Replacement Triple Trap (removes oxygen, moisture and hydrocarbons)	ea.	22473

did you **know**?

Helium-Specific Click-On Inline Super-Clean™ Trap and Kits are designed specifically for purification of helium in GC/MS systems!

tech tip

Install an indicator after the Click-On inline filter so there is no confusion about when to replace the traps.

Click-On Inline Super-Clean™ Indicator

- Oxygen: Green to Grey
- Moisture: Beige to Clear

Description	qty.	cat.#
Click-On Inline Super-Clean™ Indicator (oxygen, moisture)	ea.	22474

Click-On Inline Super-Clean™ Connectors

- Click-On connectors allow you to change traps quickly, without introducing oxygen into your system.

Description	qty.	cat.#
1/8" Brass Click-On Inline Super-Clean™ Connectors	2-pk.	22475
1/8" Stainless Steel Click-On Inline Super-Clean™ Connectors	2-pk.	22476
1/4" Brass Click-On Inline Super-Clean™ Connectors	2-pk.	22477
1/4" Stainless Steel Click-On Inline Super-Clean™ Connectors	2-pk.	22478

Click-On Inline Super-Clean™ Double Connector

- Connects any Click-On trap to a Click-On indicator.

Description	qty.	cat.#
Click-On Inline Super-Clean™ Double Connector, stainless steel	ea.	22479

Replacement O-Rings for Click-On Inline Super-Clean™ Connectors

- Pack includes 10 large o-rings and 10 small o-rings.

Description	qty.	cat.#
Replacement O-Rings for Click-On Inline Super-Clean™ Connectors	20-pk.	22481

also available

We offer a complete line of gas purification and regulation products.

For more information, see our catalog or visit our website at **www.restek.com**

Restek Brass and Stainless Steel Body Ultra-High-Purity Regulators

Restek regulators feature metal-to-metal seals throughout for long-term leak-tightness, and a metal diaphragm outlet valve ensures gas purity. Each regulator is helium leak-test-certifiable to $1x10^{-8}$scc/sec. and is fully assembled and tested for your convenience. 100psig maximum delivery pressure supports EPC operation. Maximum inlet pressure is 3000psig. Brass bar stock construction minimizes dead volume. Stainless steel construction is more easily purged of atmospheric contaminants, and is more resistant to attack from dry corrosive gases. Use stainless steel regulators in all-stainless steel systems where welded tubing and special fittings are used, and rigorous cleaning and proper gas management are practiced.

Dual-Stage Ultra-High-Purity Brass Regulators

- Oxidation-resistant, chrome-plated.
- Most stable outlet pressure control throughout the life of a high-pressure gas cylinder.
- Secondary pressure regulation not needed.
- Most widely used regulator.
- Less internal volume than stainless steel regulators.

Specifications for dual-stage regulators:
Outlet pressure: 0 to 100psig
Outlet gauge: 30"–0 to 200psig
Inlet gauge: 0 to 4000psig
Outlet assembly: diaphragm valve, 1/4" tube fitting

Fitting	qty.	cat.#
CGA 580 (N_2 He, Ar)	ea.	21667
CGA 350 (H_2, P_5)	ea.	21668
CGA 590 (Air)	ea.	21669

Dual-Stage Ultra-High-Purity Stainless Steel Regulators

- Most stable outlet pressure control throughout the life of a high-pressure gas cylinder.
- Secondary pressure regulation not needed.

Fitting	qty.	cat.#
CGA 580 (N_2, He, Ar)	ea.	20662
CGA 350 (H_2, P_5)	ea.	20663
CGA 590 (Air)	ea.	20664

Inlet connections: 1/4" FPT
Outlet assembly: 1/4" FPT port

Ultra-High-Purity Brass Line Regulator

- Oxidation-resistant, chrome-plated.
- Use where you need to reduce the line pressure by 20psi or more.
- Same purity protection as high-pressure cylinder regulators.

Fitting	Outlet Gauge	Outlet Pressure	qty.	cat.#
1/4" female NPT ports*	30" - 0 to 100psig	0-50psig	ea.	21666
1/4" female NPT ports*	30" - 0 to 200psig	0-100psig	ea.	22452

*Order appropriate male connector, pipe-to-tube fittings.

A)
B)

Male Connector, Pipe-to-Tube Fittings

Fitting Type	Size (inches)	Parker #	Similar to Swagelok®	Brass qty.	Brass cat.#	Stainless Steel qty.	Stainless Steel cat.#
A) Male Connector	1/4" to 1/4" NPT	4 MSC 4N	400-1-4	10-pk.	21842	2-pk.	21942
A) Male Connector	1/8" to 1/4" NPT	2 MSC 4N	200-1-4	10-pk.	21844	2-pk.	21944
B) Tube End Reducer	1/4" tube to 1/8"	4 TUR 2	200-R-4	5-pk.	21834	2-pk.	21934

Restek Corporation
110 Benner Circle
Bellefonte, PA 16823-8812

Presorted Standard
US Postage
PAID
Restek

Lit. Cat.# 580129

Click-On Inline Super-Clean™ Traps

Fast, simple changes of inline gas purifiers.

Click-On Inline Super-Clean™ Traps

- High-purity output ensures 99.9999% pure gas.
- Click-On fittings for easy, leak-tight cartridge changes; brass or stainless steel, 1/4" or 1/8".
- Helium-Specific Triple Trap is ideal for GC/MS.

Click-On Inline Super-Clean™ traps are the latest in in-line gas filtration. Click-On adaptor connectors allow traps to be exchanged without introducing oxygen. Spring-loaded check valves seal when a filter is removed and open only when a new filter has been locked in place. There is no need for loosening and tightening fittings every time a trap is changed, and your system will not become contaminated during the process.

The Triple Trap is ideal for purifying carrier gas—it contains oxygen, moisture, and hydrocarbon scrubbers in one cartridge.

The Fuel Gas Trap is ideal for purifying flame ionization detector (FID) fuel gases, removing both moisture and hydrocarbons.

The Helium-Specific Triple Trap is ideal for purifying helium in GC/MS systems. This trap contains oxygen, moisture, and hydrocarbon scrubbers in one cartridge, and is packed and purged under helium.

Trap replacement depends on the quality of the incoming gas. Use the double connector and install an indicating cartridge after a trap to indicate when the trap should be replaced.

Trap Type	Gas Quality at Outlet	Maximum Pressure	Maximum Flow (L/min.)	Use For	Capacity H_2O (g)	Capacity O_2 (mL)	Capacity Hydrocarbons (g)	Estimated Lifetime (years)
Moisture cat.#22467	>99.9999	11 bar 160psi	25	Inert carrier gas, helium, air, H_2	21	NA	NA	>3
Oxygen cat.#22468	>99.9999	11 bar 160psi	25	Inert carrier gas	NA	3000	NA	>3
Hydrocarbon cat.#22466	>99.9999	11 bar 160psi	25	Inert carrier gas, helium, air, H_2	NA	NA	36[3]	>3
Fuel Gas[1] cat.#22465	>99.9999	11 bar 160psi	25	Inert carrier gas, helium, air, H_2	10	NA	18[3]	>2
Triple[2] cat.#22464	>99.9999	11 bar 160psi	25	Inert carrier gas	6	1000	12[3]	>2

[1]Removes hydrocarbons, moisture.
[2]Removes hydrocarbons, moisture, oxygen.
[3]As *n*-butane.

Note: Super-Clean™ Gas Filters are recommended for purifying noncorrosive gases with low concentrations of contaminants. For oxygen purifiers, the maximum concentration of oxygen in the incoming gas stream is 0.5%.

did you **know**?

Click-On connectors allow you to change traps quickly, without introducing oxygen into your system.

Click-On Inline Super-Clean™ Trap and Connector Kits

Description	qty.	cat.#
Carrier Gas Purification Kit, 1/8" Stainless Steel Includes (2) 1/8" SS connectors and (1) oxygen/moisture/hydrocarbon triple trap	kit	22456
Carrier Gas Purification Kit, 1/8" Brass Includes (2) 1/8" brass connectors and (1) oxygen/moisture/hydrocarbon triple trap	kit	22457
Carrier Gas Purification Kit, 1/4" Stainless Steel Includes (2) 1/4" SS connectors and (1) oxygen/moisture/hydrocarbon triple trap	kit	22458
Carrier Gas Purification Kit, 1/4" Brass Includes (2) 1/4" brass connectors and (1) oxygen/moisture/hydrocarbon triple trap	kit	22459
Fuel Gas Purification Kit, 1/8" Stainless Steel Includes (4) 1/8" SS connectors and (2) hydrocarbon/moisture traps	kit	22460
Fuel Gas Purification Kit, 1/8" Brass Includes (4) 1/8" brass connectors and (2) hydrocarbon/moisture traps	kit	22461
Fuel Gas Purification Kit, 1/4" Stainless Steel Includes (4) 1/4" SS connectors and (2) hydrocarbon/moisture traps	kit	22462
Fuel Gas Purification Kit, 1/4" Brass Includes (4) 1/4" brass connectors and (2) hydrocarbon/moisture traps	kit	22463

Replacement Click-On Inline Super-Clean™ Traps

Description	qty.	cat.#
Replacement Click-On Super-Clean™ Triple Trap (removes oxygen, moisture and hydrocarbons)	ea.	22464
Replacement Click-On Super-Clean™ Fuel Gas Trap (removes moisture and hydrocarbons)	ea.	22465

Click-On Inline Super-Clean™ Ultra-High Capacity Traps

Description	qty.	cat.#
Ultra-High Capacity Hydrocarbon Trap	ea.	22466
Ultra-High Capacity Moisture Trap	ea.	22467
Ultra-High Capacity Oxygen Trap	ea.	22468

Helium-Specific Click-On Inline Super-Clean™ Trap and Kits

Description	qty.	cat.#
Kits		
Helium-Specific Carrier Gas Cleaning Kit, 1/8" Stainless Steel Includes (2) 1/8" SS connectors and (1) oxygen/moisture/hydrocarbon Helium-Specific Triple Trap	kit	22469
Helium-Specific Carrier Gas Cleaning Kit, 1/8" Brass Includes (2) 1/8" brass connectors and (1) oxygen/moisture/hydrocarbon Helium-Specific Triple Trap	kit	22470
Helium-Specific Carrier Gas Cleaning Kit, 1/4" Stainless Steel Includes (2) 1/4" SS connectors and (1) oxygen/moisture/hydrocarbon Helium-Specific Triple Trap	kit	22471
Helium-Specific Carrier Gas Cleaning Kit, 1/4" Brass Includes (2) 1/4" brass connectors and (1) oxygen/moisture/hydrocarbon Helium-Specific Triple Trap	kit	22472
Replacement Trap		
Replacement Helium-Specific Triple Trap (removes oxygen, moisture and hydrocarbons)	ea.	22473

did you **know**?

Helium-Specific Click-On Inline Super-Clean™ traps and kits are designed specifically for purifying helium in GC/MS systems!

Click-On Inline Super-Clean™ Indicator

- Indicator color change: oxygen: green to grey; moisture: beige to clear

Description	qty.	cat.#
Click-On Inline Super-Clean™ Indicator (oxygen, moisture plus adsorbents and hydrocarbons)	ea.	22474

tech tip

Install an indicator after the Click-On Inline Super-Clean™ trap so there is no confusion about when to replace the traps.

Click-On Inline Super-Clean™ Connectors

Description	qty.	cat.#
1/8" Brass Click-On Inline Super-Clean™ Connectors	2-pk.	22475
1/8" Stainless Steel Click-On Inline Super-Clean™ Connectors	2-pk.	22476
1/4" Brass Click-On Inline Super-Clean™ Connectors	2-pk.	22477
1/4" Stainless Steel Click-On Inline Super-Clean™ Connectors	2-pk.	22478

Click-On Inline Super-Clean™ Double Connector

- Connects any Click-On trap to a Click-On indicator.

Description	qty.	cat.#
Click-On Inline Super-Clean™ Double Connector, stainless steel (connects trap and indicator)	ea.	22479

Wall-Mounting Clamps for Click-On Inline Super-Clean™ Traps

Description	qty.	cat.#
Wall-Mounting Clamps for Click-On Inline Super-Clean™ Traps	4-pk.	22480

Replacement O-Rings for Click-On Inline Super-Clean™ Connectors

Description	qty.	cat.#
Replacement O-Rings for Click-On Inline Super-Clean™ Connectors	10-pk.	22481

LDP1000

Gas purifier perfect for any trace gas analyzer system

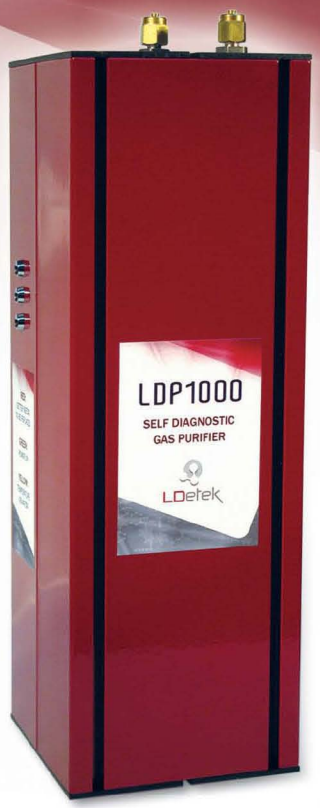

The LDP1000 is sub ppb purifier ideal for calibration gas for online analyzer as well as carrier gas for Chromatograph.

Its two steps purification design ensures that no undesired impurity is released from the purifier.

> FEATURES:

- Compact design
- 2 steps purification
- Interchangeable getter
- Easy-to-use
- Internal heater, insulation and electronics assembly
- Temperature controlled unit for better performance
- Nitrogen version available

> APPLICATIONS:

- Zero calibration gas
- Carrier gas purifier
- Mass spectrometer
- Ideal as reference gas for TCD

LDetek

> SPECIFICATIONS:

GETTER TYPE	Alloy of Zr/V/Fe 2 beds (350 and 200 Celsius)
GASES PURIFIED	Ar/He/Ne/Xe/Kr. Nitrogen and hydrogen version available.
IMPURITIES REMOVED	H_2O,O_2,CO,CO_2,N_2,THC, H_2, CH_4 (Heated) H_2O,O_2,CO,CO_2,H_2 (room temperature)
IMPURITY LEVEL	<10ppb and <1 ppb available
FLOW	200 cc/min (nominal)
GAS CONNECTIONS	1/16"– 1/8"– 1/4" compression or VCR®
RECOMMENDED OPERATING PRESSURE	100 PSIG (689 kPAG)
MINIMUM OPERATING PRESSURE	10 PSIG (28 kPAG) optional 1 PSIG (7 kPAG)
SUPPLY	120 VAC, 50 – 60 Hz or 220 VAC, 50 – 60 Hz
POWER CONSUMPTION	Maximum 200 watts
DIMENSIONS	12" (304.8) high, 4.12" (104 mm) deep, 4.25" (108 mm) wide
WEIGHT	5 lbs (2.26 kg)

> PART ORDERING:

LDP1000 OR GETTER	**-XXX**	**-X**	**-X**	**-X**	**-X**
	Operating Voltage	Gas type	Connection size	Connection Type	Supporting plate
	120 Volts (-120) 220 Volts (-220)	None: Noble gases N: Nitrogen version H : Hydrogen	1/16" 1/8" 1/4"	Compression (-C) VCR (-V)	None : no plate P : supporting plate with bypass valves

> DIMENSIONS:

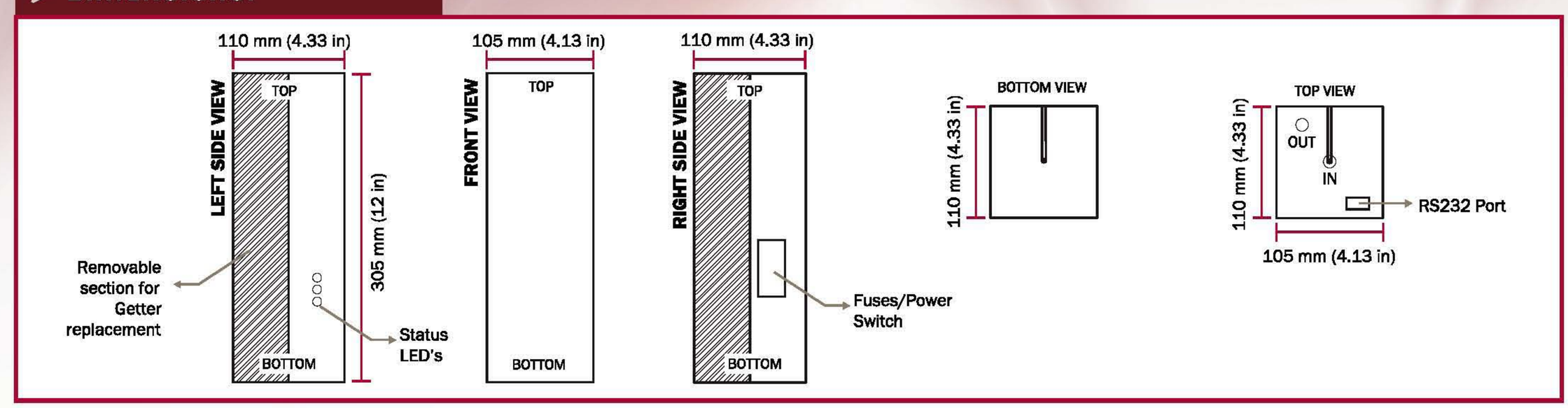

LDetek

PRINTED IN CANADA

Valco Instruments Co. Inc.
VICI AG International

GAS PURIFICATION

Overview

Gas purity is essential in any application requiring extreme sensitivity. Contaminant traps and gas purifiers for specific gases dramatically reduce the levels of contaminants, enhance the purity of lower grade helium, and help ensure instrument stability, reproducibility, and lower maintenance costs.

Purifiers for specific gases

Purifiers from VICI Metronics are designed to go in-line with the carrier or detector gas supply. These include models which were original equipment gas purifiers for the Agilent Mass Spec and LC Mass Spec.

Also available are VICI Valco heated helium and nitrogen purifiers, for peak purification performance.

- Air
- Carbon dioxide
- Helium
- Hydrogen
- Methane
- Nitrogen

Specialized purifiers

We also offer purifiers for special applications, such as chemical ionizatin MS, and nitrogen for LC/MS or from a nitrogen generator. Our liquid carbon dioxide purification technology can result in significant cost savings.

- For nitrogen for LC/MS
- For nitrogen generators
- For chemical ionizatin MS
- For liquid carbon dioxide
- Heated helium purifiers
- Heated nitrogen purifiers

Contaminant traps

For applications with a single contaminant of interest, high capacity contaminant specific traps are your best option, since they generally have four times as much capacity for the specific contaminant as a gas specific purifier.

- Hydrocarbon traps
- Mercury traps
- Moisture traps
- Oxygen traps
- Sulfur traps

Top

SEE ALSO

- More products for GC

Valco Instruments Co. Inc.
VICI AG International

GAS PURIFICATION

Gas Specific Purifiers from VICI Metronics

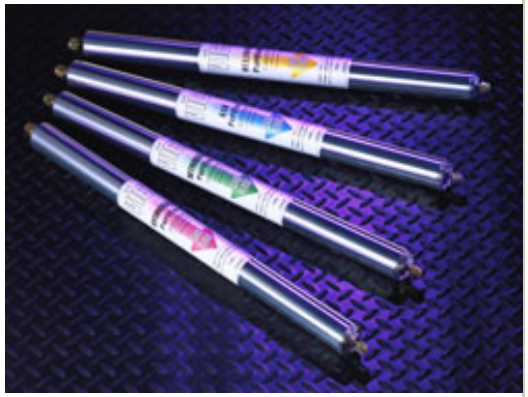

- Original equipment in Agilient® Mass Spec and LC Mass Spec
- Provide point-of-use gas purification of helium, hydrogen, methane, nitrogen, carbon dioxide, or air
- Reduce gas impurities from high PPM to low PPB levels
- Decrease baseline noise and increase GC/MS sensitivity
- Replace three traps with one purifier

Gas purification is critical to GC performance. Several types of contaminants are detrimental - notably moisture, hydrocarbons, and oxygen. VICI Metronics gas purifier modules are designed to be placed in-line with the GC carrier or detector gas supply to remove these contaminants from the analytical gases prior to their entering the GC.

Gas purification is optimized by a multiple bed format. Each bed functions at a lower contaminant concentration, resulting in a series of contaminant concentration gradients across the length of the gas purifier.
See illustration. ›

VICI Metronics gas purifiers dramatically reduce contaminant levels and absorb a greater variety of contaminants than other gas purification products. Advanced materials and design features guarantee that the modules will produce gases that are at least a factor of ten higher than a 99.9999% "chromatography grade" cylinder of gas when the purifier is supplied by a 99.995% cylinder. See chart. › The cost difference between the two grades of gas will pay for the cost of the gas purifier several times over during its operating life.

Gas	Fitting size	Product No.
Helium	1/8"	P100-1*
	1/4"	P100-2
Hydrogen	1/8"	P200-1
	1/4"	P200-2
Nitrogen	1/8"	P300-1

Air	1/8"	P400-1
	1/4"	P400-2
Methane	1/8"	P500-1
	1/4"	P500-2
Carbon dioxide	1/8"	P600-1
	1/4"	P600-2

* Original equipment for Agilent Mass Spec and LC Mass Spec (Agilent part# 5182-3467)
** Original equipment for Agilent Mass Spec and LC Mass Spec (Agilent part# G1946-80047)

Top

MORE INFORMATION

- Contact us to find out more about VICI Metronics gas purifiers. North American customers can call toll-free (877) 737-1887.
- Fittings and gas purity
- Table of PPB at outlet for six typical contaminants
- Printable data sheet

SPECIFICATIONS

Max inlet pressure:
1000 psi; Recommended flow:
500 mL/min

SAFETY NOTE

Not to be used for purification of oxygen

GAS PURIFICATION

Specialized Purifiers

For nitrogen for LC/MS

VICI Metronics nitrogen purifiers are optimized for the high flow nitrogen gas supply used on LC/MS instruments. A nitrogen purifier module placed in line with the nitrogen gas delivery system removes moisture, hydrocarbons, halocarbons, and oxygen, retaining them for the operating life of the purifier.

- Product information

For nitrogen generators

The purifier for nitrogen generators reduces most contaminant levels from many parts per million to levels that are below the lower limit of analytical detection, and absorbs a larger number and a greater variety of contaminants than other commonly used adsorptive materials.

- Product information

For chemical ionization MS

In response to the increase in commercial availability of instrumentation for Chemical Ionization Mass Spectroscopy, VICI Metronics has developed a purifier designed specifically for the unique demands of the field.

- Product information

For liquid carbon dioxide

VICI Metronics has developed a CO_2 purification technology which can take Coleman grade CO_2 and produce SFC/SFE grade CO_2 at the point of use, resulting in significant cost savings.

- Product information

Heated helium and nitrogen purifiers

The purification substrate in VICI Valco ga
ac
is

SEE ALSO
- Valco heated helium purifiers and nitrogen purifiers
- Liquid carbon dioxide purifiers
- Nitrogen purifier for LC/MS
- Purifier for nitrogen from a nitrogen generator
- Purifier for CI/MS

purifiers can be used safely in industrial applications with minimal precautions. The miniature version of each purifier is designed to be installed in a GC's flow path immediately upstream of the injector.

- Helium purifiers
- Nitrogen purifiers

Top

Valco Instruments Co. Inc.
VICI AG International

GAS PURIFICATION

Contaminant Traps from VICI Metronics

- Ultra-high capacity for the contaminant of interest
- Application specific, gas independent
- Capable of higher flow rates than our gas specific purifiers

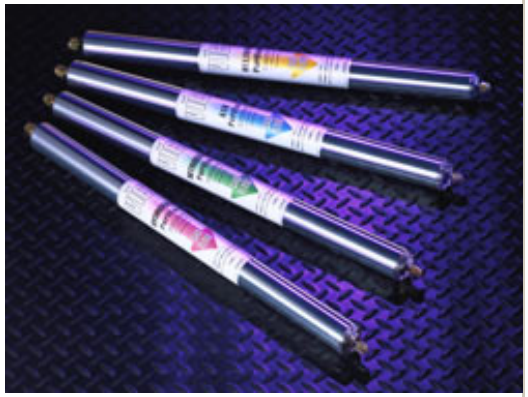

For applications with a single contaminant of interest, high capacity contaminant specific traps are your best option, since they generally have four times as much capacity for the specific contaminant as a purifier. This translates to a capacity that exceeds twelve standard type "A" tanks of gas or the equivalent of over 300,000 liters of gas at standard temperature and pressure.

Trapped contaminant	Fitting size	Length	Product No.
Hydrocarbons	1/8"	22.5"	T200-1
	1/4"	22.5"	T200-2
Mercury	1/8"	12"	T700-1
	1/4"	12"	T700-2
Moisture	1/8"	22.5"	T100-1
	1/4"	22.5"	T100-2
Oxygen	1/8"	22.5"	T300-1
	1/4"	22.5"	T300-2
Sulfur	1/8"	12"	T400-1
		22.5"	T401-1
	1/4"	12"	T400-2
		22.5"	T401-2

MORE INFORMATION

- Contact us to find out more about VICI Metronics

Valco Instruments Co. Inc.
VICI AG International

GAS PURIFICATION

Gas Purifiers for Agilent Instruments

Original equipment for Agilent Mass Spec and LC Mass Spec

Metronics helium and nitrogen purifiers were supplied for many years as original equipment with the Agilent Mass Spec and LC Mass Spec. The same units are still available from VICI Metronics.

Purifier	Agilent Product No.	VICI Product No.
Helium/inert, 1/8" fittings	5182-3467	P100-1
Nitrogen, 1/4" fittings	G1946-80047	P300-2

MORE INFORMATION

- Contact Metronics to find out more about VICI Metronics gas purifiers. North American customers can call toll-free (877) 737-1887.
- Fittings and gas purity
- Table of PPB at outlet for six typical contaminants
- Printable data sheet

SAFETY NOTE

Not to be used for purification of oxygen

GAS PURIFICATION

Heated Helium Purifiers from VICI Valco Instruments

Note: *These heated helium purifiers are unsurpassed at removing nitrogen. For applications which can tolerate slightly more nitrogen, unheated* ***Metronics helium purifiers*** *offer an economical option.*

Carrier gas purity is essential in any application requiring extreme sensitivity. Impurities limit detector sensitivity and can even destroy capillary columns. The Valco helium purifier (HP2) provides "point-of-use" gas purification of helium or other noble gases, such as Ar, Ne, Kr, and Xe, to sub-ppm levels of reactive gaseous impurities.

Based on 10 ppm total inlet impurities, outlet impurities are less than 10 ppb for H_2O, H_2, O_2, N_2, NO, NH_3, CO, CO_2, and CH_4. Other impurities removed include CF_4, CCl_4, SiH_4, and light hydrocarbons.

The purification substrate is a non-evaporable heat-activated gettering alloy. This stable alloy is contained in a welded assembly, so the purifiers can be used safely in industrial applications with minimal precautions. When the getter is heated, the oxide film on the particle surface is eliminated, allowing helium to diffuse into the bulk of the getter particles. The purifier features a self-regulating design which maintains the getter material at the optimum temperature and eliminates the possibility of thermal runaway.

The miniature version is designed to be installed in a gas chromatograph's flow path immediately upstream of the injector. The HPM will remove any contaminants introduced by flow controllers, elastomeric tube seals, pressure regulators, crude traps, or other system components that are not completely clean and leak-tight.

Purifers include a universal power supply.

Description	Voltage	Product No.
HEATED HELIUM PURIFIERS		
Standard size	110 VAC	HP2
	230 VAC	HP2-220
Miniature	110 VAC	HPM
	230 VAC	HPM-220
REPLACEMENT POWER SUPPLY		
For standard and miniature purifiers	110 VAC	PS24VDC-CE
	230 VAC	PS24VDC-CE-220
REPLACEMENT GETTER ASSEMBLY		
For standard purifier only		I-23572HP2

Top

MORE INFORMATION

- Declaration of CE compliance
- User manual
- User manual for miniature version

MAX OPERATING PRESSURE

1000 psig

DISPOSING OF SPENT GETTER CARTRIDGES

Contact VICI to obtain a return authorization number. The packaged getter cartridge should be clearly marked "Traps for Disposal".

SEE ALSO

- VICI Metronics unhea helium purifier modu

GAS PURIFICATION

Heated Nitrogen Purifiers from VICI Valco Instruments

Note: *These heated nitrogen purifiers are the only ones which remove methane. For applications which can tolerate methane, unheated* ***Metronics nitrogen purifiers*** *offer an economical option.*

Carrier gas purity is essential in any application requiring extreme sensitivity. Impurities limit detector sensitivity and can even destroy capillary columns. The Valco nitrogen purifier provides "point-of-use" purification to sub-ppm levels of reactive gaseous impurities.

Based on 10 ppm total inlet impurities, outlet impurities are less than 10 ppb for H_2O, H_2, O_2, NO, NH_3, CO, CO_2, and CH_4. Other impurities removed include CF_4, CCl_4, SiH_4, and light hydrocarbons. He, Ne, Ar, Kr, Xe, and Rn are *not* removed.

The purification substrate is a non-evaporable heat-activated gettering alloy. This stable alloy is contained in a welded assembly, so the purifiers can be used safely in industrial applications with minimal precautions. When the getter is heated, the oxide film on the particle surface is eliminated, allowing nitrogen to diffuse into the bulk of the getter particles. The purifier features a self-regulating design which maintains the getter material at the optimum temperature and eliminates the possibility of thermal runaway.

The miniature version is designed to be installed in a gas chromatograph's flow path immediately upstream of the injector. The NPM will remove any contaminants introduced by flow controllers, elastomeric tube seals, pressure regulators, crude traps, or other system components that are not completely clean and leak-tight.

Purifers include a universal power supply.

Description	Voltage	Product No.
HEATED NITROGEN PURIFIERS		
Standard size	110 VAC	NP2
	230 VAC	NP2-220
Miniature	110 VAC	NPM
	230 VAC	NPM-220
REPLACEMENT POWER SUPPLY		
For standard and miniature purifiers	110 VAC	PS24VDC-CE
	230 VAC	PS24VDC-CE-220
REPLACEMENT GETTER ASSEMBLY		
For standard purifier only		I-23572NP2

Top

MORE INFORMATION

- Declaration of CE compliance
- User manual
- User manual for miniature version

MAX OPERATING PRESSURE

1000 psig

DISPOSING OF SPENT GETTER CARTRIDGES

Contact VICI to obtain a return authorization number. The packaged getter cartridge should be clearly marked "Traps for Disposal".

SEE ALSO

- VICI Metronics unhea nitrogen purifier mo

Valco Instruments Co. Inc.
VICI AG International

GAS PURIFICATION

Air Purifiers from VICI Metronics

- Reduce gas impurities from high PPM to low PPB levels
- Decrease baseline noise and increase GC/MS sensitivity
- Replace three traps with one purifier

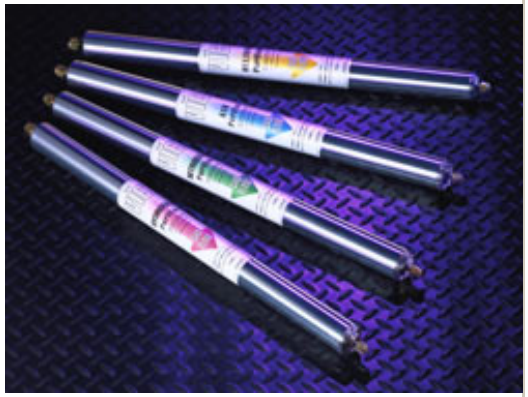

Gas purification is critical to GC performance. Several types of contaminants in air are detrimental - notably moisture and hydrocarbons.

Gas purification is optimized by a multiple bed format. Each bed functions at a lower contaminant concentration, resulting in a series of contaminant concentration gradients across the length of the gas purifier.
See illustration. ›

Fitting size	Length	Product No.
1/8"	22.5"	P400-1
1/4"	22.5"	P400-2

- Fittings and gas purity
- Table of PPB at outlet for six typical contaminants
- Printable data sheet
- MSDS

SPECIFICATIONS

Max inlet pressure:
1000 psi; Recommended flow:
500 mL/min

SAFETY NOTE

Not to be used for purification of oxygen

MORE INFORMATION

- Contact us to find out more about VICI Metronics gas purifiers. North American customers can call toll-free (877) 737-1887.

Valco Instruments Co. Inc.
VICI AG International

GAS PURIFICATION

Carbon Dioxide Gas Purifier for High Purity Applications

- Outperforms carbon-based hydrocarbon traps
- Larger number and variety of contaminants removed
- Optimized for the high flows of process equipment

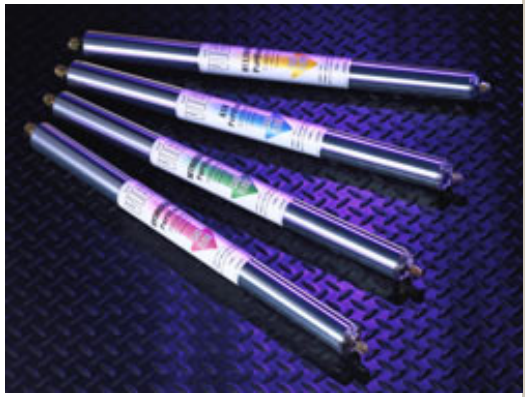

These modules, designed to be placed in-line with the CO_2 gas supply, use patented adsorptive materials to capture and retain a broad spectrum of hydrocarbons, halocarbons, and other contaminants that can be present in your CO_2 gas delivery system. The contaminants are retained for the operating life of the purifier, which is typically good for four tanks of CO_2.

Performance is optimized by incorporating a multiple bed format so that each successive bed functions at a lower contaminant concentration. The result is a series of contaminant concentration gradients across the length of the module.
See illustration. ›

Fitting size	Length	Product No.
1/8"	22.5"	P600-1
1/4"	22.5"	P600-2

1887.

- Fittings and gas purity
- Printable data sheet

SPECIFICATIONS

Max inlet pressure:
1000 psi; Recommended flow:
500 mL/min

Top ▲

MORE INFORMATION

- Contact us to find out more about VICI Metronics gas purifiers. North American customers can call toll-free (877) 737-

SEE ALSO

- Liquid carbon dioxide purifiers

Valco Instruments Co. Inc.
VICI AG International

GAS PURIFICATION

Helium Purifiers

Helium purifier modules from VICI Metronics

Purifiers from VICI Metronics are designed to go in-line with the carrier or detector gas supply. These include models which were original equipment gas purifiers for the Agilent Mass Spec and LC Mass Spec.

- Product information

Heated helium purifiers from VICI Valco Instruments

Also available in a compact miniature version, these heated helium purifiers are unsurpassed at removing nitrogen. For applications which can tolerate slightly more nitrogen, unheated Metronics helium purifiers offer an economical gas purification option.

- Product information

Valco Instruments Co. Inc.
VICI AG International

GAS PURIFICATION

Hydrogen Purifiers from VICI Metronics

- Reduce gas impurities from high PPM to low PPB levels
- Decrease baseline noise and increase GC/MS sensitivity
- Replace three traps with one purifier

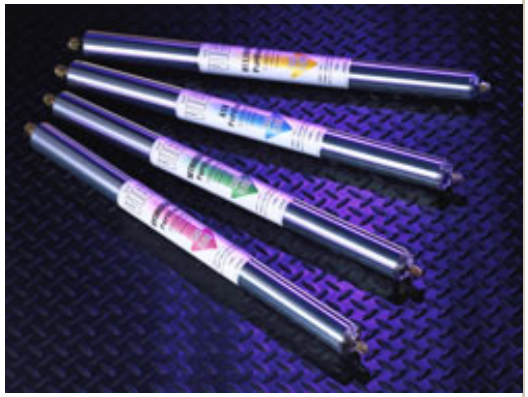

Gas purification is critical to GC performance. Several types of contaminants are detrimental - notably moisture, hydrocarbons, and oxygen. VICI Metronics gas purifier modules are designed to be placed in-line with the GC carrier or detector gas supply to remove these contaminants from the analytical gases prior to their entering the GC.

VICI Metronics gas purifiers dramatically reduce contaminant levels and absorb a greater variety of contaminants than other gas purification products. Gas purification is optimized by a multiple bed format. Each bed functions at a lower contaminant concentration, resulting in a series of contaminant concentration gradients across the length of the gas purifier. See illustration. ›

Fitting size	Length	Product No.
1/8"	22.5"	P200-1
1/4"	22.5"	P200-2

- Fittings and gas purity
- Table of PPB at outlet for six typical contaminants
- Printable data sheet
- MSDS

SPECIFICATIONS

Max inlet pressure:
1000 psi; Recommended flow:
500 mL/min

SAFETY NOTE

MORE INFORMATION

- Contact us to find out more about VICI Metronics gas purifiers. North American customers can call toll-free (877) 737-1887.

Valco Instruments Co. Inc.
VICI AG International

GAS PURIFICATION

Methane Purifiers from VICI Metronics

- Reduce gas impurities from high PPM to low PPB levels
- Decrease baseline noise and increase GC/MS sensitivity
- Replace three traps with one purifier

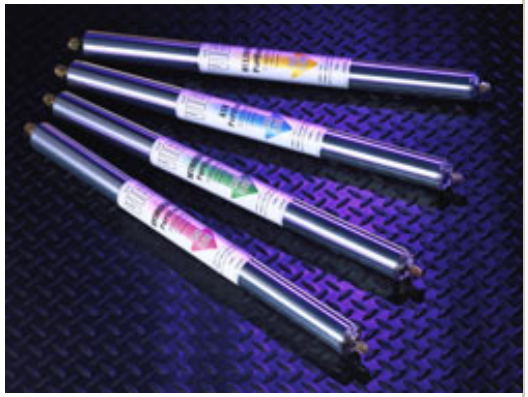

Gas purification is critical to GC performance. Several types of contaminants are detrimental - notably moisture, hydrocarbons, and oxygen. VICI Metronics gas purifier modules are designed to be placed in-line with the GC carrier or detector gas supply to remove these contaminants from the analytical gases prior to their entering the GC.

VICI Metronics gas purifiers dramatically reduce contaminant levels and absorb a greater variety of contaminants than other gas purification products. Gas purification is optimized by a multiple bed format. Each bed functions at a lower contaminant concentration, resulting in a series of contaminant concentration gradients across the length of the gas purifier. See illustration. ›

Fitting size	Length	Product No.
1/8"	22.5"	P500-1
1/4"	22.5"	P500-2

- Fittings and gas purity
- Table of PPB at outlet for six typical contaminants
- Printable data sheet
- MSDS

SPECIFICATIONS

Max inlet pressure:
1000 psi; Recommended flow:
500 mL/min

SAFETY NOTE

Not to be used for purification of oxygen

SEE ALSO

- Purifier for CI/MS

MORE INFORMATION

- Contact us to find out more about VICI Metronics gas purifiers. North American customers can call toll-free (877) 737-1887.

GAS PURIFICATION

Nitrogen Purifiers

Nitrogen purifier modules from VICI Metronics

Purifiers from VICI Metronics are designed to go in-line with the carrier or detector gas supply. These include models which were original equipment gas purifiers for the Agilent Mass Spec and LC Mass Spec.

- Product information

Heated nitrogen purifiers from VICI Valco Instruments

Also available in a compact miniature version, these heated nitrogen purifiers are the only ones which remove methane. For applications which can tolerate methane, unheated Metronics nitrogen purifiers offer an economical gas purification option.

- Product information

Valco Instruments Co. Inc.
VICI AG International

GAS PURIFICATION

Purifier for CI/MS Applications from VICI Metronics

- 1/8" compression fittings
- 1000 psig pressure rating
- Compatible with most CI gases
- Welded stainless steel body

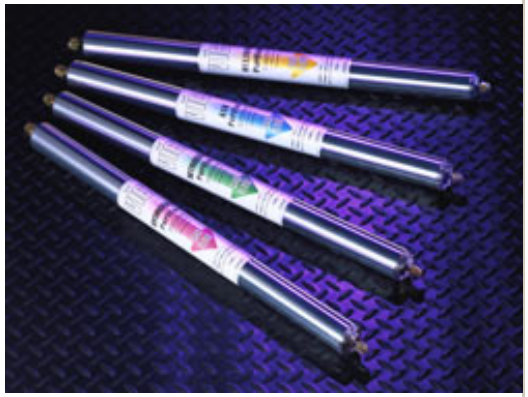

The use of Chemical Ionization Mass Spectroscopy has increased in recent years, with instrumentation to perform this sensitive analytical technique now available commercially. In response to this growth, VICI Metronics has developed a gas purifier designed specifically for the unique demands of chemical ionization.

Several types of contaminants are detrimental to CI performance - notably moisture, heavy hydrocarbons, halocarbons, and oxygen. A Metronics CI purifier module placed in line with the gas delivery system removes these contaminants, reducing levels from many parts per million to levels that are below the lower limit of analytical detection, and retains them for the operating life of the purifier. (Recommended replacement is after three bottles of gas, or if detector baseline drift and noise become apparent.)

A very high capacity has been engineered into the gas purifier by using several different materials for gross contaminant removal and additional materials for the removal of trace amounts of the contaminants. Three separate adsorption chemistries are incorporated into the operating design of the gas purifier to ensure the optimal capacity and efficiency. This successive bad format insures high capacity as well as a very high efficiency for the removal of contaminants that can be present in even high purity methane.
See illustration. ›

Fitting size	Length	Product No.
1/8"	22.5"	P500-1

MORE INFORMATION

- Contact us to find out more about VICI Metronics gas purifiers. North American customers can call toll-free (877) 737-1887.
- Fittings and gas purity
- Printable data sheet

SPECIFICATIONS

Max inlet pressure:
1000 psi;
Max recommended flow:

Valco Instruments Co. Inc.
VICI AG International

GAS PURIFICATION

Nitrogen Purifier for LC/MS Applications from VICI Metronics

- Designed to purify nitrogen gas produced from liquid nitrogen
- Decrease baseline noise and increase GC/MS sensitivity
- Reduce background noise and ghost peaks

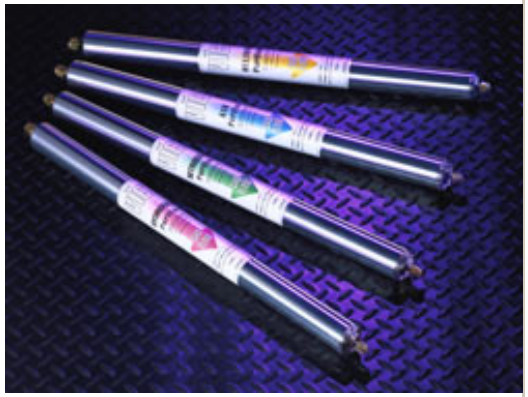

VICI Metronics nitrogen purifiers are optimized for the high flow nitrogen gas supply used on LC/MS instruments. Several types of contaminants are detrimental to LC/MS performance - notably moisture, hydrocarbons, and halocarbons. A Metronics nitrogen purifier module placed in line with the nitrogen gas delivery system removes these contaminants, retaining them for the operating life of the purifier.

The purifier reduces most contaminant levels from many parts per million to levels that are below the lower limit of analytical detection, and absorbs a larger number and a greater variety of contaminants than other commonly used adsorptive materials. In particular, the Metronics nitrogen purifier has been shown to out perform the carbon-based hydrocarbon traps previously used for this application.

Fitting size	Length	Product No.
1/8"	22.5"	P310-1
1/4"	22.5"	P310-2

MORE INFORMATION

- Contact us to find out more about VICI Metronics gas purifiers. North American customers can call toll-free (877) 737-1887.
- Fittings and gas purity
- Printable data sheet
- MSDS

SPECIFICATIONS

Max inlet pressure:
1000 psi;
Max flow:
12 L/min

SAFETY NOTE

This purifier is designed to be used with nitrogen gas produced from liquid nitrogen, or with nitrogen gas containing less than 500 ppm of oxygen. If this product is used on a stream with a high oxygen content, it may get hot enough to cause injury. Use our Purifier for Nitrogen Generators to purify high oxygen content nitrogen.

Valco Instruments Co. Inc.
VICI AG International

GAS PURIFICATION

SEARCH

Purifier for Nitrogen Produced by Nitrogen Generators

- Specifically designed to purify nitrogen produced from nitrogen generators
- Decrease baseline noise and increase GC/MS sensitivity
- Reduce background noise and ghost peaks

VICI Metronics nitrogen purifiers are optimized for the high flow nitrogen gas supply used on LC/MS instruments. Several types of contaminants are detrimental to LC/MS performance - notably moisture, hydrocarbons, and halocarbons. A Metronics nitrogen purifier module placed in line with the nitrogen gas delivery system removes these contaminants, retaining them for the operating life of the purifier.

The purifier reduces most contaminant levels from many parts per million to levels that are below the lower limit of analytical detection, and absorbs a larger number and a greater variety of contaminants than other commonly used adsorptive materials. In particular, the Metronics nitrogen purifier has been shown to out perform the carbon-based hydrocarbon traps previously used for this application.

Fitting size	Length	Product No.
1/8"	22.5"	P350-1
1/4"	22.5"	P350-2

SPECIFICATIONS

Max inlet pressure:
1000 psi;
Max flow:
12 L/min

SAFETY NOTE

This purifier is designed to be used with nitrogen gas produced from liquid nitrogen, or with nitrogen gas containing less than 500 ppm of oxygen. If this product is used on a stream with a high oxygen content, it may get hot enough to cause injury. Use our Purifier for Nitrogen Generators to purify high oxygen content nitrogen.

MORE INFORMATION

- Contact us to find out more about VICI Metronics gas purifiers. North American customers can call toll-free (877) 737-1887.
- Fittings and gas purity
- Printable data sheet
- MSDS

SPECIFICATIONS

Max inlet pressure:
1000 psi; Max flow:
12L/min

Valco Instruments Co. Inc.
VICI AG International

GAS PURIFICATION

Liquid Carbon Dioxide Purifier from VICI Metronics

- Produce SFC/SFE grade CO_2 from Coleman grade CO_2
- Remove oxygen, moisture, sulfur compounds, halocarbons, and most hydrocarbons

In applications such as environmental testing, food analysis, and pigment analysis, the unique solvating properties of CO_2 at its triple point (super-critical stage) are exploited in the extraction of compounds from difficult matrices. Since any contaminants that may be present in the CO_2 will be concentrated in the sample, only ultra-pure CO_2 is acceptable for this type of work.

VICI Metronics has developed a new CO_2 purification technology (patent pending) which can take Coleman grade CO_2 and produce SFC/SFE grade CO_2 at the point of use, resulting in significant cost savings. Removal of oxygen, moisture, sulfur compounds, halocarbons, and most hydrocarbons are all accomplished with this unified CO_2 purification technology.

Fitting size	Length	Product No.
1/8"	22.5"	P700-1
1/4"	22.5"	P700-2

Top

MORE INFORMATION

- Contact us to find out more about VICI Metronics gas purifiers. North American customers can call toll-free (877) 737-1887.
- MSDS

SEE ALSO

- Carbon dioxide gas purifiers

Valco Instruments Co. Inc.
VICI AG International

GAS PURIFICATION

Hydrocarbon Traps from VICI Metronics

- Removes non-methane hydrocarbons from any non-reactive gas
- Also removes halocarbons

The proprietary sorbent materials used in our high capacity hydrocarbon trap far out-perform the standard materials used for this application. The sorbent is extremely hydrophobic, so no capacity is lost in a moist gas stream. Studies have shown that this material is the most efficient and has the highest capacity for non-methane hydrocarbons of any sorbent material commercially available.

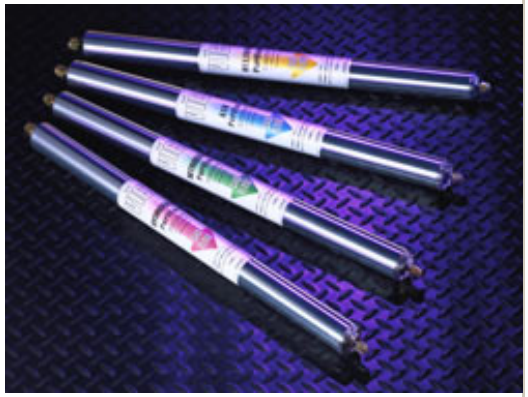

Fitting size	Length	Product No.
1/8"	22.5"	T200-1
1/4"	22.5"	T200-2

MORE INFORMATION

- Contact us to find out more about VICI Metronics contaminant traps. North American customers can call toll-free (877) 737-1887.
- Fittings and gas purity
- Printable data sheet
- MSDS

SPECIFICATIONS

Max inlet pressure:
1000 psi; Recommended flow:
500 mL/min

Valco Instruments Co. Inc.
VICI AG International

GAS PURIFICATION

Mercury Traps from VICI Metronics

- Removes mercury from any non-reactive gas

The VICI Metronics mercury trap utilizes a proprietary adsorbent to remove trace mercury vapor from gas streams. This trap will ensure better "zero's," and can even be used after your mercury analyzer to prevent any trace mercury from venting to the environment. Connections are made with 1/8" or 1/4" stainless steel compression fittings. Both versions are rated for a maximum pressure of 1000 psi, with a maximum flow rate of 20 lpm.

Fitting size	Length	Product No.
1/8"	12"	T700-1
1/4"	12"	T700-2

MORE INFORMATION

- Contact us to find out more about VICI Metronics contaminant traps. North American customers can call toll-free (877) 737-1887.
- Fittings and gas purity
- Printable data sheet
- MSDS

SPECIFICATIONS

Max inlet pressure:
1000 psi; Recommended max flow:
20 L/min

Valco Instruments Co. Inc.
VICI AG International

GAS PURIFICATION

Moisture Traps from VICI Metronics

- Removes moisture from any non-reactive gas
- Removes H_2O, plus some CO and CO_2

These high capacity moisture traps are designed to provide additional capacity for moisture removal in critical applications where moisture is the contaminant of concern. The successive bed format of this moisture trap combines both very high capacity materials in the inlet with very high efficiency materials in the outlet. This approach to moisture removal far out performs any other moisture trapping technology.

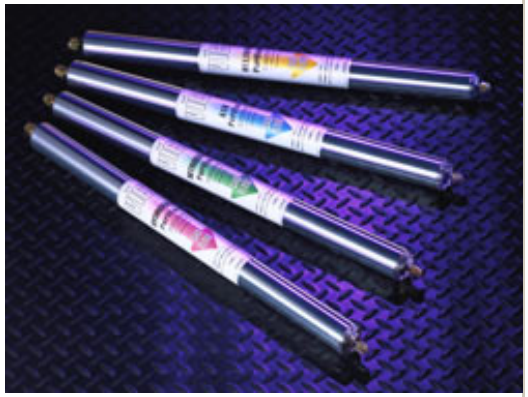

Fitting size	Length	Product No.
1/8"	22.5"	T100-1
1/4"	22.5"	T100-2

MORE INFORMATION

- Contact us to find out more about VICI Metronics contaminant traps. North American customers can call toll-free (877) 737-1887.
- Fittings and gas purity
- Printable data sheet
- MSDS

SPECIFICATIONS

Max inlet pressure:
1000 psi; Recommended flow:
500 mL/min

Valco Instruments Co. Inc.
VICI AG International

GAS PURIFICATION

Oxygen Traps from VICI Metronics

- Removes oxygen from any non-reactive gas
- Also removes some moisture

These high capacity oxygen traps employ a time proven oxygen scavenging materials technology. A high surface area reduced metal is used to irreversibly bind any free oxygen present in the gas - a state of the art technique used in industrial and electronics applications throughout the world.

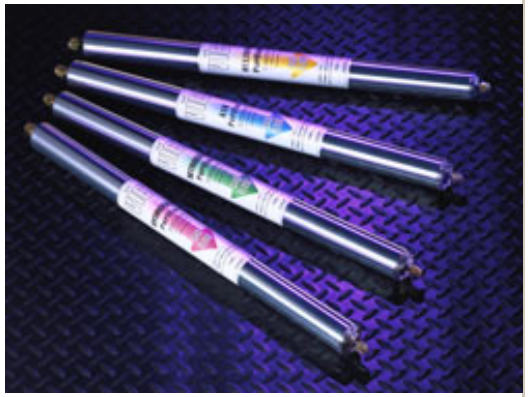

Fitting size	Length	Product No.
1/8"	22.5"	T300-1
1/4"	22.5"	T300-2

MORE INFORMATION

- Contact us to find out more about VICI Metronics contaminant traps. North American customers can call toll-free (877) 737-1887.
- Fittings and gas purity
- Printable data sheet
- MSDS

SPECIFICATIONS

Max inlet pressure:
1000 psi; Recommended flow:
500 mL/min

Valco Instruments Co. Inc.
VICI AG International

GAS PURIFICATION

Sulfur Traps from VICI Metronics

- Removes all sulfur-containing compounds from any non-reactive gas
- Also removes halocarbons and most non-methane hydrocarbons

This unique trap was developed to support sulfur analyzers. For low level detection, the removal of all sulfur compounds present in the supply gas is essential.

This trap will also improve the performance and catalyst lifetime of zero air instruments, since the catalysts used are prone to poisoning from halocarbons and sulfur compounds.

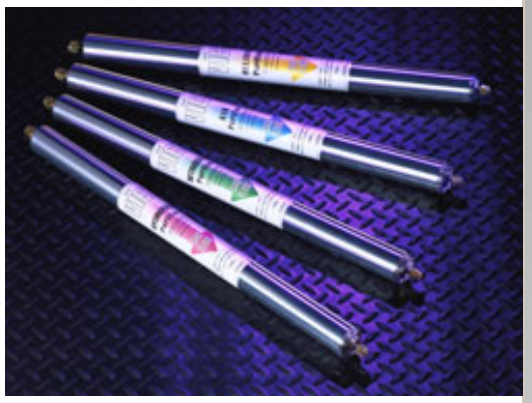

Fitting size	Length	Product No.
1/8"	12"	T400-1
	22.5"	T401-1*
1/4"	12"	T400-2
	22.5"	T401-2*

* Special order

MORE INFORMATION

- Contact us to find out more about VICI Metronics contaminant traps. North American customers can call toll-free (877) 737-1887.
- Fittings and gas purity
- Printable data sheet
- MSDS

SPECIFICATIONS

Max inlet pressure:
1000 psi; Recommended flow:
500 mL/min

Valco Instruments Co. Inc.
VICI AG International

GAS PURIFICATION

Helium Purifiers from VICI Metronics

- Original equipment in Agilient® Mass Spec and LC Mass Spec
- Reduce gas impurities from high PPM to low PPB levels
- Decrease baseline noise and increase GC/MS sensitivity
- Replace three traps with one purifier

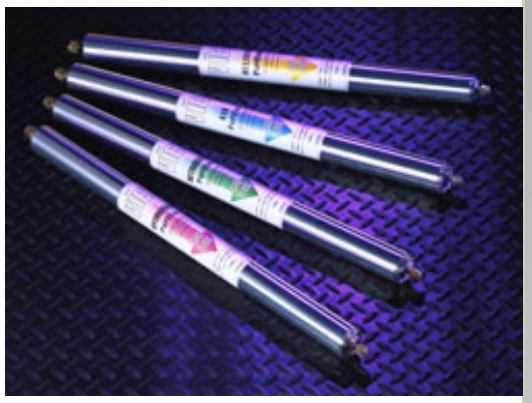

Gas purification is critical to GC performance. Several types of contaminants are detrimental - notably moisture, hydrocarbons, and oxygen. VICI Metronics gas purifier modules are designed to be placed in-line with the GC carrier or detector gas supply to remove these contaminants from the analytical gases prior to their entering the GC.

Gas purification is optimized by a multiple bed format. Each bed functions at a lower contaminant concentration, resulting in a series of contaminant concentration gradients across the length of the gas purifier.
See illustration. ›

VICI Metronics gas purifiers dramatically reduce contaminant levels and absorb a greater variety of contaminants than other gas purification products. Advanced materials and design features guarantee that the modules will produce gases that are at least a factor of ten higher than a 99.9999% "chromatography grade" cylinder of gas when the purifier is supplied by a 99.995% cylinder. See chart. › The cost difference between the two grades of gas will pay for the cost of the gas purifier several times over during its operating life.

Fitting size	Length	Product No.
1/8"	22.5"	P100-1*
1/4"	22.5"	P100-2

* Original equipment for Agilent Mass Spec and LC Mass Spec (Agilent part# 5182-3467)

gas purifiers. North American customers can call toll-free (877) 737-1887.

- Fittings and gas purity
- Table of PPB at outlet for six typical contaminants
- Printable data sheet
- MSDS

SPECIFICATIONS

Max inlet pressure:
1000 psi; Recommended flow:
500 mL/min

SEE ALSO

- Heated helium purifiers from VICI Valco Instruments

SAFETY NOTE

Not to be used for purification of oxygen

MORE INFORMATION

- Contact us to find out more about VICI Metronics

Valco Instruments Co. Inc.
VICI AG International

GAS PURIFICATION

Nitrogen Purifiers from VICI Metronics

- Original equipment in Agilient® Mass Spec and LC Mass Spec
- Reduce gas impurities from high PPM to low PPB levels
- Decrease baseline noise and increase GC/MS sensitivity
- Replace three traps with one purifier

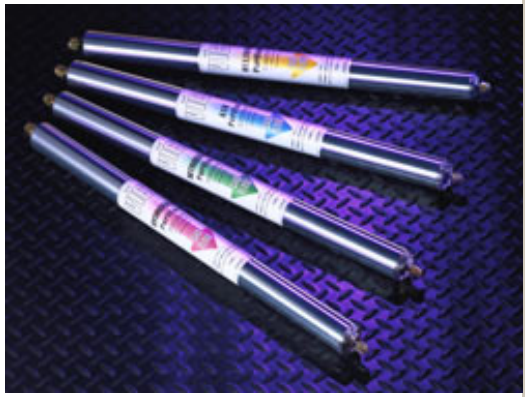

Gas purification is critical to GC performance. Several types of contaminants are detrimental - notably moisture, hydrocarbons, and oxygen. VICI Metronics gas purifier modules are designed to be placed in-line with the GC carrier or detector gas supply to remove these contaminants from the analytical gases prior to their entering the GC.

VICI Metronics gas purifiers dramatically reduce contaminant levels and absorb a greater variety of contaminants than other gas purification products. Gas purification is optimized by a multiple bed format. Each bed functions at a lower contaminant concentration, resulting in a series of contaminant concentration gradients across the length of the gas purifier. See illustration. ›

Fitting size	Length	Product No.
1/8"	22.5"	P300-1
1/4"	22.5"	P300-2*

* Original equipment for Agilent Mass Spec and LC Mass Spec (Agilent part# G1946-80047)

MORE INFORMATION

- Contact us to find out more about VICI Metronics gas purifiers. North American customers can call toll-free (877) 737-1887.
- Fittings and gas purity
- Table of PPB at outlet for six typical contaminants
- Printable data sheet
- MSDS

SPECIFICATIONS

Max inlet pressure:
1000 psi; Recommended flow:
500 mL/min

SAFETY NOTE

Not to be used for purification of oxygen

SEE ALSO

- Valco heated nitrogen purifiers
- Nitrogen purifier for LC/MS
- Purifier for nitrogen from a nitrogen generator

Valco Instruments Co. Inc.
VICI AG International

GAS PURIFICATION

Fittings and Gas Purity

Basically, the point to remember is "the fewer the better". Every connection in your gas delivery system has the potential for leaks; the more fittings you have, the greater the potential. In the illustration below, several gas purification options are depicted:

- The Metronics gas specific purifier minimizes the number of fittings. Total fittings: 2
- The "Manifold System" has two compression fittings for the system and one organic O-ring seal for each cartridge. Total fittings: at least 5
- A typical "Contaminant Trap" configuration has several components. Before the gas supply even enters the GC there are at least 4 modules. Total fittings: at least 8

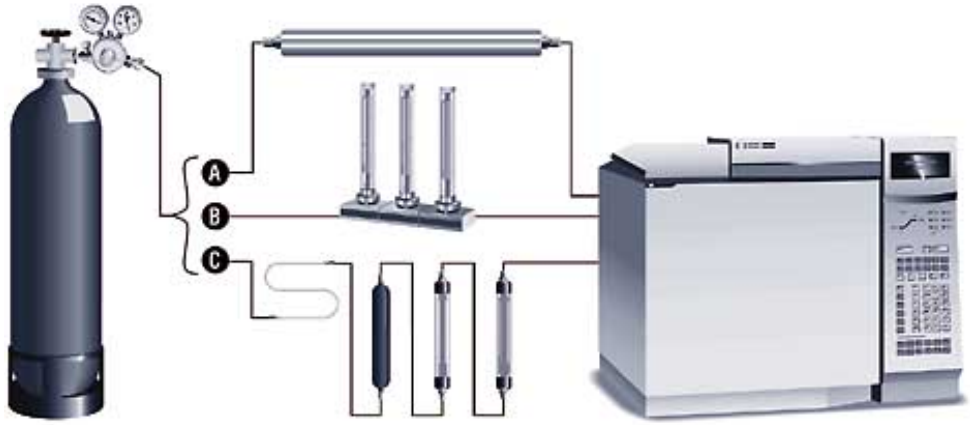

MORE INFORMATION

- Contact Metronics to find out more about VICI Metronics gas purifiers. North American customers can call toll-free (877) 737-1887.

Valco Instruments Co. Inc.
VICI AG International

GAS PURIFICATION

Gas Specific Purifiers - PPB at Outlet

Based on 50 ppm nominal inlet concentration level

Purifier	CO	CO_2	O_2	H_20	Sulfur compounds	Non-methane hydrocarbons
Helium	<1	<1	<1	<1	<1	<3
Hydrogen	<1	<1	<1	<1	<1	<3
Air				<1		<3
Methane	<1	<1	<1	<1	<1	<3
Nitrogen	<1	<1	<1	<1	<1	<3

MORE INFORMATION

- Contact Metronics to find out more about VICI Metronics gas purifiers. North American customers can call toll-free (877) 737-1887.
- Fittings and gas purity
- Printable data sheet

Gas Specific Purifiers and Contaminant Traps

- Reduce gas impurities from high PPM to low PPB levels
- Decrease baseline noise and increase GC/MS sensitivity
- Replace three traps with one purifier

Description

Several types of contaminants are detrimental to GC performance – notably moisture, hydrocarbons, and oxygen. VICI Metronics gas-specific purifier modules are designed to be placed in-line with the GC carrier or detector gas supply to remove these contaminants from the analytical gases prior to entering the GC. The modules dramatically reduce contaminant levels and absorb a greater variety of contaminants than other products.

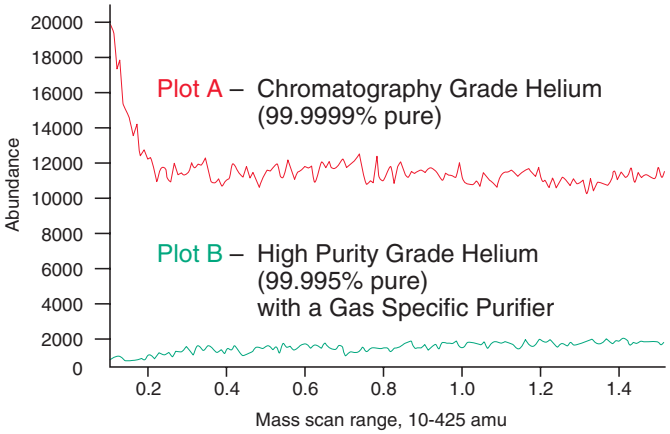

Performance is optimized by a multiple bed format. Each bed functions at a lower contaminant concentration, resulting in a series of contaminant concentration gradients across the length of the module. Advanced materials and design features guarantee that the modules will produce gases that are at least a factor of ten higher than a 99.9999% "chromatography grade" cylinder of gas when the purifier is supplied by a 99.995% cylinder. The cost difference between the two grades of gas will pay for the cost of the purifier several times over during its operating life.

Our successive bed format achieves the highest purity gas commercially available

- Two very high capacity hydrocarbon and moisture sorbents at the inlet for effective contaminant removal
- Unique proprietary broad spectrum sorbent material for multiple contaminant removal
- Two oxygen scavenging materials for both high capacity and high efficiency O_2 removal
- Multiple bed format to allow several step reduction in contaminants
- Removal of H_2O, O_2, halocarbons, hydrocarbons, CO, CO_2, H_2, and sulfur containing compounds with a single purifier
- Very high efficiency sorbents at the outlet for trace contaminant removal

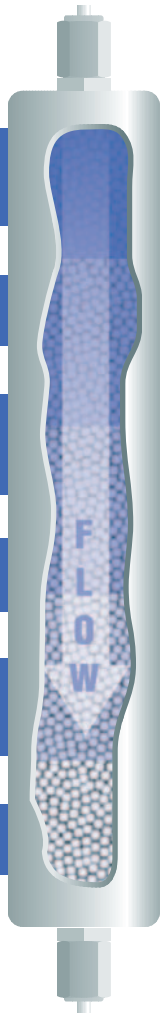

Fittings: the Fewer the Better

Every connection in your gas delivery system has the potential for leaks; the more fittings you have, the greater the potential. In the illustration below, several gas purification options are depicted:

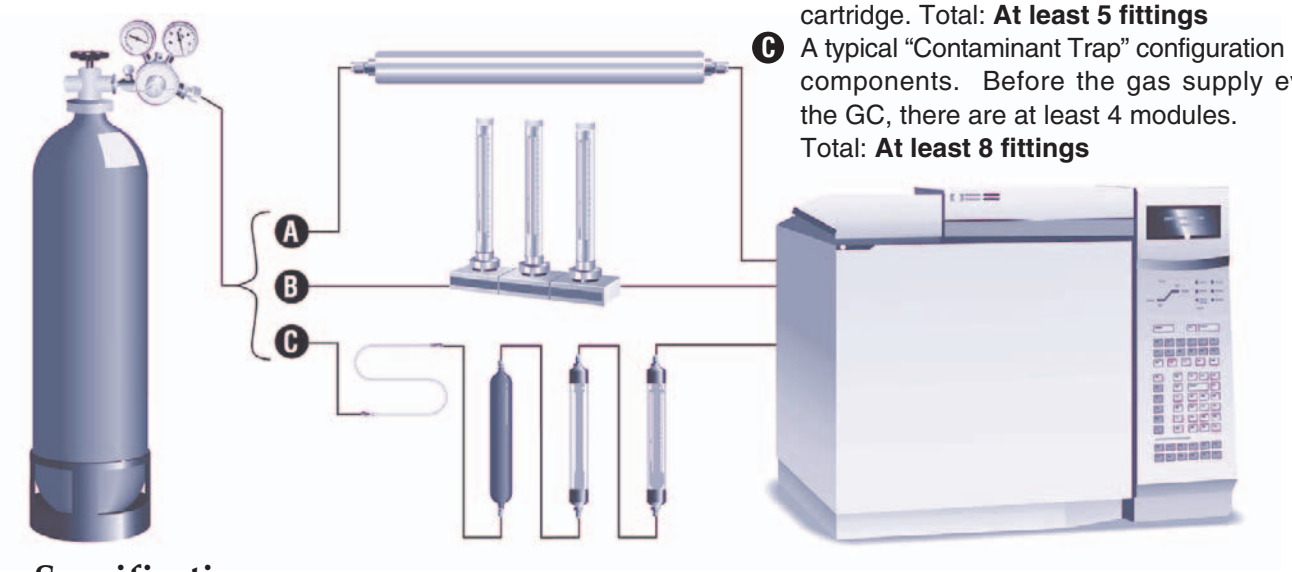

A The VICI Metronics Gas Specific Purifier minimizes the number of fittings. Total: **2 fittings**

B The "Manifold System" has two compression fittings for the system and one organic O-ring seal for each cartridge. Total: **At least 5 fittings**

C A typical "Contaminant Trap" configuration has several components. Before the gas supply even enters the GC, there are at least 4 modules. Total: **At least 8 fittings**

Specifications

Length ..... 52.3 cm (21")
Diameter ..... 3.8 cm (1.5")
Maximum inlet pressure ..... 6895 kPa (1000 psi)
Maximum recommended flow ..... 500 ml/min
Pressure drop, 827 kPa (120 psi) inlet, at a flow of 0 to 500 ml/min ..... < 0.20 psi
Compression end fittings ..... 1/8" or 1/4"
Shipping weight .....1,300 g (3.04 lb)

Selection Guide and Ordering Information

Product Description	Product no.	Fitting	PPB at outlet, based on 50 PPM nominal inlet concentration level					
			CO	CO_2	O_2	H_2O	Sulfur compounds	NMHC*
Helium purifier	P-100-1 P-100-2	1/8" 1/4"	<1	<1	<1	<1	<1	<3
Hydrogen purifier	P-200-1 P-200-2	1/8" 1/4"	<1	<1	<1	<1	<1	<3
Nitrogen purifier	P-300-1 P-300-2	1/8" 1/4"	<1	<1	<1	<1	<1	<3
Nitrogen purifier for LC/MS apps	P-310-1 P-310-2	1/8" 1/4"				<25	<25	<25
Purifier for nitrogen generators	P-350-1 P-350-2	1/8" 1/4"				<25	<25	<25
Air purifier	P-400-1 P-400-2	1/8" 1/4"				<1		<3
Moisture trap	T-100-1 T-100-2	1/8" 1/4"				<1		
Hydrocarbon trap	T-200-1 T-200-2	1/8" 1/4"						<3
Oxygen trap	T-300-1 T-300-2	1/8" 1/4"			<1	<1		
Sulfur trap	T-400-1	1/8"				<1	<1	
Methane purifier	P-500-1	1/8"	<1	<1	<1	<1	<1	<3

*NMHC = non-methane hydrocarbons

VICI® Metronics
tel: 360 697-9199
fax: 360 697-6682
purifiers@vici.com

VICI AG International
tel: Int + 41 41 925-6200
fax: Int + 41 41 925-6201
info@vici.ch

US customers call toll-free (877) 737-1887

MATERIAL SAFETY DATA SHEET

1 Product and Company Identification

Product Name: **Moisture Trap**

Company Name:

VICI® Metronics Inc
26272 Twelve Trees Ln NW
Poulsbo, WA 98370

Emergency Contact Number
1-877-737-1887 or 1-360-697-9199

2 Composition

Ingredient	CAS No.	Wt%	ACGIH TLB-TWA	OSHA PEL-TWA
Aluminum oxide (non-fibrous)	1344-28-1	< 45	10 mg/m^3	15 mg/m^3 Total dust 5 mg/m^3 Respirable dust
Silicon oxide (synthetic)	7631-86-9	< 40	10 mg/m^3 Inhalable 3 mg/m^3 Respirable	15 mg/m^3 Total dust 5 mg/m^3 Respirable fraction
Sodium oxide	1313-59-3	< 10	N/E	N/E
Magnesium oxide	1309-48-4	< 5	10 mg/m^3 Fume	15 mg/m^3 Fume, total particu-late
Quartz	14808-60-7	< 1	0.05 mg/m^3 Respirable dust	10 mg/m^3 Total dust 3.3 mg/m^3 Respirable dust

Abbreviations:

N/E - None established
CAS - Chemical Abstracts Service
ACGIH - American Conference of Governmental Industrial Hygienists
TLV - Threshold Limit Value
OSHA - Occupational Safety and Health Administration - USA
TWA - Time Weighted Average
PEL - Permissible Exposure Limit
STEL - Short-Term Exposure Limit

3 Hazard Identification

Emergency Overview

This product is in a sealed container. Exposure can only take place if the integrity of the container is compromised. In case the container is opened, the contained product can cause irritation to the eyes, skin, or upper respiratory system. Quartz may cause cancer.

Potential Health Effects

Primary Routes of Exposure: The product is in a sealed container. As long as the container is not opened, exposure should not take place.

Skin Contact: May cause skin irritation with repeated or prolonged exposure.

Eye Contact: Dust and/or product may cause eye discomfort and/or irritation seen as tearing and reddening.

Ingestion: This product is considered to have a low order of oral toxicity.

Inhalation: Inhalation of product and/or dust may cause irritation of the respiratory system.

Target Organ: Prolonged or repeated exposure may cause lung injury or cancer.

Carcinogenicity Classification

International Agency for Research on Cancer (LARC)

Silicon oxide (synthetic) - Not classifiable as human carcinogen. (Group 3)
Crystaline silica inhaled in the form of quartz from occupational sources is carcinogenic to humans. (Group 1)

U.S. National Toxicology Program (NTP)

Not Regulated
Quartz - Known Human Carcinogen.

U.S. Occupational Safety and Health Administration (OSHA)

Neither the product nor the component(s) are classified or regulated.

4 First Aid Measures

Skin Contact: Wash affected area with soap and water. If irritation develops, obtain medical attention.

Eye Contact: Flush with water for at least 15 minutes. If irritation occurs, obtain medical attention.

Ingestion: Do not induce vomiting. Obtain medical attention.

Inhalation: Remove affected person to fresh air. If respiratory problems develop, obtain medical attention.

Notes to Physician: Hydrocarbons and other materials that contact the product during normal use can be retained on the product. The retained materials may be hazardous. Identify the retained material and treat accordingly.

5 Fire Fighting Measures

Flash Point: Unused material will not burn.

Extinguishing Media: Use media appropriate for surrounding fire.

Fire and Explosion Hazards: Used material may contain materials of a hazardous nature. The user of this product must identify the hazards of the retained material and inform the fire fighters of these hazards.

6 Accidental Release Measures

Large Spill: Isolate the affected areas. Confine entry into the affected area to those persons properly protected. Special attention should be given to eye, skin, and respiratory protection because recovery of dry product is expected to generate dust. Sweep, shovel, or vacuum spilled product into appropriate containers. (Do not use a vacuum if material has contacted a hydrocarbon material.)

Small Spill: Sweep or vacuum spilled product into appropriate container. (Do not use a vacuum if material has contacted a hydrocarbon.) Product should be disposed in accordance with all applicable government regulations. See section 13 of MSDS, Disposal Information.

7 Handling and Storage

The product is in sealed containers. In the event the seal on the container is breached, store the product in tightly closed, properly labeled containers. Store out of direct sunlight. Store in dry area.

8 Exposure Controls and Personal Protection

Respiratory Protection: Product is in a sealed container. As long as the seal on the container is not breached, respiratory protection is not needed. If the container seal is breached and natural ventilation is inadequate, use mechanical ventilation, other engineering controls, or a toxic dust respirator (in USA - NIOSH/MSHA approved) to prevent inhalation of product dust.

Skin Protection: Use gloves to avoid prolonged or repeated skin contact.

Eye Protection: Safety glasses or goggles as necessary to prevent eye contact.

9 Physical and Chemical Properties

These data do not represent technical or sales specifications.

Appearance:	Material is in a sealed container
Odor:	None
pH:	Not applicable
% Volatile:	Not applicable
Pour Point:	Not applicable
Viscosity:	Not applicable
Vapor Density:	Not applicable
Specific Gravity:	Not applicable
Apparent Bulk Density:	0.7 ± 0.1 g/cc
Solubility in Water:	Negligible
Boiling Point:	Not applicable
Freezing Point:	Not applicable
Melting Point:	Not applicable
Vapor Pressure	Not applicable

10 Stability

Stability:	Stable.
Conditions to Avoid:	None known.
Hazardous Decomposition Products:	Hydrocarbons and other materials that contact the product during normal use can be retained on the product. It is reasonable to expect that decomposition products will come from these retained materials of use.
Hazardous Polymerization:	Will not occur.
Incompatible Materials:	Contact with acids may cause leaching of metals.

11 Toxicological Information

Acute Oral Toxicity:	An oral LD_{50} is not available for this product.
Acute Dermal Toxicity:	A dermal LD_{50} is not available for this product.
Acute Inhalation Toxicity:	An inhalation LC_{50} is not available for this product
Irritation:	No data for this product.

Additional Toxicological Information:

Aluminum oxide:	Inhalation of finely divided particles may cause lung damage. Intrapleural TD_{LO}: 90 mg/kg (rat). Implant TD_{LO}: 200 mg/kg (rat). TD_{LO} is Toxic Dose Low.
Silicon oxide:	Exposure can cause lung disease called silicosis, with cough and shortness of breath.

12 Ecological Information

No data is available for the product.

13 Disposal Information

Dispose of the product in accordance with all applicable government regulations. This product (in its fresh unused state) is not listed by generic name or trademark name in the U.S. EPA's Resource Conservation and Recovery Act (RCRA) Hazardous Waste Management Regulations and does not possess any of the four identifying characteristics of hazardous waste (ignitability, corrosivity, reactivity, or toxicity).

14 Transportation Information

U.S. Department of Transportation Shipping Name:	Not regulated.
International Maritime Organization (IMO):	Not regulated.

United States

TSCA *(Toxic Substances Control Act):*

All the ingredients of this mixture are listed on the TSCA Chemical Substance Inventory.

CERCLA *(Comprehensive Environmental Response, Compensation, and Liability Act) Reportable Quantity:*

The following component(s) of this product is/are subject to release reporting under 40 CFR 302 when release exceeds the Reportable Quantity (RQ):

—None—

SARA *(Superfund Amendments and Reauthorization Act of 1986) Title III:*

Section 302 (Extremely Hazardous Substances):

The following component(s) of this product is/are subject to the emergency planning provisions of 40 CFR 355 when there are amounts equal or greater than the Threshold Planning Quantity (TPQ):

—None—

Section 313 (Toxic Chemicals):

The following component(s) have been specified as Toxic Chemicals under SARA Section 313 and may be subject to the Toxic Release Inventory (TRI) reporting requirements under 40 CFR 372:

—None—

State Community Right-to-Know Legislation

The following component(s) of this product are regulated under California's Proposition 65:

This product contains quartz, known in the State of California to cause cancer.

European Union (EU)

European Inventory of Existing Commercial Chemical Substances:

All components of this preparation are included in EINECS/ELINCS.

Aluminum oxide (non-fibrous)	2156916
Silicon oxide (synthetic)	2315454
Sodium oxide	2152089
Magnesium oxide	2151719
Quartz	2388784

Council of European Communities Directive on Classification, Packaging and Labelling of Dangerous Substances/Preparation (67/548/EEC & 88/379/EEC):

No Dangerous Goods Label Required.

Canada

Canadian Hazard Products Act:

This product is classified as a material causing other toxic effects, carcinogenicity - Class D, Division 2, Subdivision 1, under regulations pursuant to the Federal Hazardous Products Act (*e.g.* WHMIS).

Revision 3

Summary of Changes:	Updated for three-year review cycle
I.D./Form:	MS0007
Supersedes:	March 1996

Revision 4

Summary of Changes:	Section 1
I.D./Form:	MS0007
Supersedes:	December 2005

Revision 5

Summary of Changes:	Section 1
I.D./Form:	MS0007
Supersedes:	November 2008

HMIS™ - Hazardous Materials Identification System

HMIS™ Ratings	
HEALTH	1*
FLAMMABILITY	0
REACTIVITY	0

0 - minimal hazard
1 - slight hazard
2 - moderate hazard
3 - serious hazard
4 - severe hazard
* - may cause cancer

MATERIAL SAFETY DATA SHEET

1 Product and Company Identification

Product Name: **Hydrocarbon Trap**

Company Name:

VICI® Metronics Inc
26272 Twelve Trees Ln NW
Poulsbo, WA 98370

Emergency Contact Number
1-877-737-1887 or 1-360-697-9199

2 Composition

Ingredient	CAS No.	Wt%	ACGIH TLB-TWA	OSHA PEL-TWA
Silicon oxide (synthetic)	7631-86-9	< 80	10 mg/m^3 Inhalable 3 mg/m^3 Respirable	15 mg/m^3 Total dust 5 mg/m^3 Respirable fraction
Aluminum oxide (non-fibrous)	1344-28-1	< 23	10 mg/m^3	15 mg/m^3 Total dust 5 mg/m^3 Respirable dust
Aluminosilicate	1327-36-2	< 20	10 mg/m^3 Inhalable dust 3 mg/m^3 Respirable dust	15 mg/m^3 Total dust 5 mg/m^3 Respirable dust
Potassium oxide	12136-45-7	< 5	N/E	N/E
Sodium oxide	1313-59-3	< 5	N/E	N/E
Water	7732-18-5	< 5	N/E	N/E

Abbreviations:

N/E - None established
CAS - Chemical Abstracts Service
ACGIH - American Conference of Governmental Industrial Hygienists
TLV - Threshold Limit Value
OSHA - Occupational Safety and Health Administration - USA
TWA - Time Weighted Average
PEL - Permissible Exposure Limit
STEL - Short-Term Exposure Limit

3 Hazard Identification

Emergency Overview

This product is in a sealed container. Exposure can only take place if the integrity of the container is compromised. In case the container is opened, the contained product can cause irritation to the eyes, skin, or upper respiratory system.

Potential Health Effects

Primary Routes of Exposure: The product is in a sealed container. As long as the container is not opened, exposure should not take place.

Skin Contact: May cause skin irritation with repeated or prolonged exposure.

Eye Contact: Dust and/or product may cause eye discomfort and/or irritation seen as tearing and reddening.

Ingestion: This product is considered to have a low order of oral toxicity.

Inhalation: Inhalation of product and/or dust may cause irritation of the respiratory system.

Target Organ: Prolonged or repeated exposure may cause lung injury.

Carcinogenicity Classification

International Agency for Research on Cancer (LARC)
Silicon oxide (synthetic) - Not classifiable as human carcinogen (Group 3)

U.S. National Toxicology Program (NTP)
Not Regulated

U.S. Occupational Safety and Health Administration (OSHA)
Neither the product nor the component(s) are classified or regulated.

4 First Aid Measures

Skin Contact: Wash affected area with soap and water. If irritation develops, obtain medical attention.

Eye Contact: Flush with water for at least 15 minutes. If irritation occurs, obtain medical attention.

Ingestion: Do not induce vomiting. Obtain medical attention.

Inhalation: Remove affected person to fresh air. If respiratory problems develop, obtain medical attention.

Notes to Physician: Hydrocarbons and other materials that contact the product during normal use can be retained on the product. The retained materials may be hazardous. Identify the retained material and treat accordingly.

5 Fire Fighting Measures

Flash Point: Unused material will not burn.

Extinguishing Media: Use media appropriate for surrounding fire.

Fire and Explosion Hazards: Used material may contain materials of a hazardous nature. The user of this product must identify the hazards of the retained material and inform the fire fighters of these hazards.

6 Accidental Release Measures

Large Spill: Isolate the affected areas. Confine entry into the affected area to those persons properly protected. Special attention should be given to eye, skin and respiratory protection because recovery of dry product is expected to generate dust. Sweep, shovel, or vacuum spilled product into appropriate containers. (Do not use a vacuum if material has contacted a hydrocarbon material.)

Small Spill: Sweep or vacuum spilled product into appropriate container. (Do not use a vacuum if material has contacted a hydrocarbon.) Product should be disposed in accordance with all applicable government regulations. See section 13 of MSDS, Disposal Information.

7 Handling and Storage

The product is in sealed containers. In the event the seal on the container is breached, store the product in tightly closed, properly labeled containers. Store out of direct sunlight. Store in dry area.

8 Exposure Controls and Personal Protection

Respiratory Protection: Product is in a sealed container. As long as the seal on the container is not breached, respiratory protection is not needed. If the container seal is breached and natural ventilation is inadequate, use mechanical ventilation, other engineering controls, or a toxic dust respirator (in USA - NIOSH/MSHA approved) to prevent inhalation of product dust.

Skin Protection: Use gloves to avoid prolonged or repeated skin contact.

Eye Protection: Safety glasses or goggles as necessary to prevent eye contact.

9 Physical and Chemical Properties

These data do not represent technical or sales specifications.

Appearance:	Material is in a sealed container
Odor:	None
pH:	Not applicable
% Volatile:	Not applicable
Pour Point:	Not applicable
Viscosity:	Not applicable
Vapor Density:	Not applicable
Specific Gravity:	Not applicable
Apparent Bulk Density:	0.7 ± 0.1 g/cc
Solubility in Water:	Negligible
Boiling Point:	Not applicable
Freezing Point:	Not applicable
Melting Point:	Not applicable
Vapor Pressure	Not applicable

10 Stability

Stability:	Stable.
Conditions to Avoid:	None known.
Hazardous Decomposition Products:	Hydrocarbons and other materials that contact the product during normal use can be retained on the product. It is reasonable to expect that decomposition products will come from these retained materials of use.
Hazardous Polymerization:	Will not occur.
Incompatible Materials:	Contact with acids may cause leaching of metals.

11 Toxicological Information

Acute Oral Toxicity:	An oral LD_{50} is not available for this product.
Acute Dermal Toxicity:	A dermal LD_{50} is not available for this product.
Acute Inhalation Toxicity:	An inhalation LC_{50} is not available for this product
Irritation:	No data for this product.

Additional Toxicological Information:

Aluminum oxide:	Inhalation of finely divided particles may cause lung damage. Intrapleural TD_{LO}: 90 mg/kg (rat). Implant TD_{LO}: 200 mg/kg (rat). TD_{LO} is Toxic Dose Low.
Silicon oxide:	Exposure can cause lung disease called silicosis, with cough and shortness of breath.

12 Ecological Information

No data is available for the product.

13 Disposal Information

Dispose of the product in accordance with all applicable government regulations. This product (in its fresh unused state) is not listed by generic name or trademark name in the U.S. EPA's Resource Conservation and Recovery Act (RCRA) Hazardous Waste Management Regulations and does not possess any of the four identifying characteristics of hazardous waste (ignitability, corrosivity, reactivity, or toxicity).

14 Transportation Information

U.S. Department of Transportation Shipping Name:	Not regulated.
International Maritime Organization (IMO):	Not regulated.

United States

TSCA *(Toxic Substances Control Act):*

All the ingredients of this mixture are listed on the TSCA Chemical Substance Inventory.

CERCLA *(Comprehensive Environmental Response, Compensation, and Liability Act) Reportable Quantity:*

The following component(s) of this product is/are subject to release reporting under 40 CFR 302 when release exceeds the Reportable Quantity (RQ):

—None—

SARA *(Superfund Amendments and Reauthorization Act of 1986) Title III:*

Section 302 (Extremely Hazardous Substances):

The following component(s) of this product is/are subject to the emergency planning provisions of 40 CFR 355 when there are amounts equal or greater than the Threshold Planning Quantity (TPQ):

—None—

Section 313 (Toxic Chemicals):

The following component(s) have been specified as Toxic Chemicals under SARA Section 313 and may be subject to the Toxic Release Inventory (TRI) reporting requirements under 40 CFR 372:

—None—

State Community Right-to-Know Legislation

The following component(s) of this product are regulated under California's Proposition 65:

—None—

European Union (EU)

European Inventory of Existing Commercial Chemical Substances:

All components of this preparation are included in EINECS/ELINCS.

Silicon oxide (synthetic)	2315454
Aluminum oxide (non-fibrous)	2156916
Aluminosilicate	2154751
Potassium oxide	2352276
Sodium oxide	2152089
Water	2317912

Council of European Communities Directive on Classification, Packaging and Labelling of Dangerous Substances/Preparation (67/548/EEC & 88/379/EEC):

No Dangerous Goods Label Required.

Canada

Canadian Hazard Products Act:

This product is not classified as a controlled product under regulations pursuant to the federal Hazardous Product Act (*e.g.* WHMIS).

Revision 2

Summary of Changes:	Sections 2, 15
I.D./Form:	MS0009
Supersedes:	March 1996

Revision 3

Summary of Changes:	Section 1
I.D./Form:	MS0009
Supersedes:	December 2005

HMIS™ - Hazardous Materials Identification System

HMIS™ Ratings	
HEALTH	1
FLAMMABILITY	0
REACTIVITY	0

0 - minimal hazard
1 - slight hazard
2 - moderate hazard
3 - serious hazard
4 - severe hazard

MATERIAL SAFETY DATA SHEET

1 Product and Company Identification

Product Name: **Oxygen Trap**

Company Name:

VICI® Metronics Inc
26272 Twelve Trees Ln NW
Poulsbo, WA 98370

Emergency Contact Number
1-877-737-1887 or 1-360-697-9199

2 Composition

Ingredient	CAS No.	Wt%	ACGIH TLB-TWA	OSHA PEL-TWA
Copper	7440-50-8	< 50	1 mg/m^3 Dust and mist as CU	1 mg/m^3 Dust and mist as CU
Zinc oxide	1314-13-2	< 30		15 mg/m^3 Total dust 5 mg/m^3 Respirable dust as Al
Aluminum oxide (non-fibrous)	1344-28-1	< 30	10 mg/m^3	15 mg/m^3 Total dust 5 mg/m^3 Respirable dust as Al

Abbreviations:

N/E - None established
CAS - Chemical Abstracts Service
ACGIH - American Conference of Governmental Industrial Hygienists
TLV - Threshold Limit Value
OSHA - Occupational Safety and Health Administration - USA
TWA - Time Weighted Average
PEL - Permissible Exposure Limit
STEL - Short-Term Exposure Limit

3 Hazard Identification

Emergency Overview

This product is in a sealed container. Exposure can only take place if the integrity of the container is compromised. In case the container is opened, the contained product can cause irritation to the eyes, skin, or upper respiratory system.

Potential Health Effects

Primary Routes of Exposure: The product is in a sealed container. As long as the container is not opened, exposure should not take place.

Skin Contact: Prolonged or repeated exposures may cause dermatitis or an allergic skin reaction.

Skin Absorption: This product will probably not be absorbed through human skin.

Eye Contact: Dust and/or product may cause eye discomfort and/or irritation seen as tearing and reddening.

Ingestion: This product is slightly toxic by ingestion.

Inhalation: Inhalation of product and/or dust may cause irritation of the respiratory system.

Target Organ: Prolonged or repeated exposure may cause lung injury or cancer.

Carcinogenicity Classification

International Agency for Research on Cancer (LARC)
??

U.S. National Toxicology Program (NTP)
??

U.S. Occupational Safety and Health Administration (OSHA)
??

4 First Aid Measures

Skin Contact: Wash affected area with soap and water. If irritation develops, obtain medical attention.

Eye Contact: Flush with water for at least 15 minutes. If irritation occurs, obtain medical attention.

Ingestion: Drink one or two glasses of water. If gastrointestinal symptoms develop, obtain medical attention.

Inhalation: Remove affected person to fresh air. If respiratory problems develop, obtain medical attention.

Notes to Physician: Hydrocarbons and other materials that contact the product during normal use can be retained on the product. The retained materials may be hazardous. Identify the retained material and treat accordingly.

5 Fire Fighting Measures

Flash Point: Unused material will not burn.

Extinguishing Media: Use media appropriate for surrounding fire.

Fire and Explosion Hazards: Used material may contain materials of a hazardous nature. The user of this product must identify the hazards of the retained material and inform the fire fighters of these hazards.

6 Accidental Release Measures

Large Spill: Isolate the affected areas. Confine entry into the affected area to those persons properly protected. Special attention should be given to eye, skin, and respiratory protection because recovery of dry product is expected to generate dust. Sweep, shovel, or vacuum spilled product into appropriate containers. (Do not use a vacuum if material has contacted a hydrocarbon material.)

Small Spill: Sweep or vacuum spilled product into appropriate container. (Do not use a vacuum if material has contacted a hydrocarbon.) Product should be disposed in accordance with all applicable government regulations. See section 13 of MSDS, Disposal Information.

7 Handling and Storage

The product is in sealed containers. In the event the seal on the container is breached, store the product in tightly closed, properly labeled containers. Store out of direct sunlight. Store in dry area.

8 Exposure Controls and Personal Protection

Respiratory Protection: Product is in a sealed container. As long as the seal on the container is not breached, respiratory protection is not needed. If the container seal is breached and natural ventilation is inadequate, use mechanical ventilation, other engineering controls, or a toxic dust respirator (in USA - NIOSH/MSHA approved) to prevent inhalation of product dust.

Skin Protection: Use gloves to avoid prolonged or repeated skin contact.

Eye Protection: Safety glasses or goggles as necessary to prevent eye contact.

9 Physical and Chemical Properties

These data do not represent technical or sales specifications.

Appearance:	Material is in a sealed container
Odor:	None
pH:	Not applicable
% Volatile:	0%
Pour Point:	Not applicable
Viscosity:	Not applicable
Vapor Density:	Not applicable
Specific Gravity:	Not applicable
Apparent Bulk Density:	59 - 62 lbs/ft^3
Solubility in Water:	Insoluble
Boiling Point:	Not applicable
Freezing Point:	Not applicable
Melting Point:	Not applicable
Vapor Pressure	Not applicable

10 Stability

Stability:	Stable.
Conditions to Avoid:	None known.
Hazardous Decomposition Products:	Hydrocarbons and other materials that contact the product during normal use can be retained on the product. It is reasonable to expect that decomposition products will come from these retained materials of use.
Hazardous Polymerization:	Will not occur.
Incompatible Materials:	Do not expose to gas streams with an oxygen content above 550 ppm.

11 Toxicological Information

Acute Oral Toxicity: Low oral toxicity, but ingestion may cause irritation of the gastrointestinal tract. May cause headache, nausea, and vomiting. An oral LD_{50} is not available for this product.

Copper oxide: LD_{50} is > 2000 mg/kg (rat)
Zinc oxide: LD_{50} is > 5000 mg/kg (rat)
Aluminum oxide: LD_{50} is > 2000 mg/kg (rat)

Acute Dermal Toxicity: A dermal LD_{50} is not available for this product.

Acute Inhalation Toxicity: An inhalation LC_{50} is not available for this product

Irritation: No data for this product.

Additional Toxicological Information:

Aluminum oxide: Inhalation of finely divided particles may cause lung damage. Intrapleural TD_{LO}: 90 mg/kg (rat). Implant TD_{LO}: 200 mg/kg (rat). TD_{LO} is Toxic Dose Low.

12 Ecological Information

This product is essentially insoluble in water. Although this product is not a hazardous waste under RCRA, 40 CFR 261, because of environmental concerns, care should be taken to minimize release to the environment. (See Section 13, Disposal Considerations.)

13 Disposal Information

Dispose of the product in accordance with all applicable government regulations. This product (in its fresh unused state) is not listed by generic name or trademark name in the U.S. EPA's Resource Conservation and Recovery Act (RCRA) Hazardous Waste Management Regulations and does not possess any of the four identifying characteristics of hazardous waste (ignitability, corrosivity, reactivity, or toxicity).

14 Transportation Information

U.S. Department of Transportation Shipping Name:	Not regulated.
International Maritime Organization (IMO):	Not regulated.

United States

TSCA *(Toxic Substances Control Act):*

All the ingredients of this mixture are listed on the TSCA Chemical Substance Inventory.

CERCLA *(Comprehensive Environmental Response, Compensation, and Liability Act) Reportable Quantity:*

The following component(s) of this product is/are subject to release reporting under 40 CFR 302 when release exceeds the Reportable Quantity (RQ):

—None—

SARA *(Superfund Amendments and Reauthorization Act of 1986) Title III:*

Section 302 (Extremely Hazardous Substances):

The following component(s) of this product is/are subject to the emergency planning provisions of 40 CFR 355 when there are amounts equal or greater than the Threshold Planning Quantity (TPQ):

—None—

Section 313 (Toxic Chemicals):

The following component(s) have been specified as Toxic Chemicals under SARA Section 313 and may be subject to the Toxic Release Inventory (TRI) reporting requirements under 40 CFR 372:

Aluminum oxide
Copper oxide
Zinc oxide

State Community Right-to-Know Legislation

The following component(s) of this product are regulated under California's Proposition 65:

—None—

European Union (EU)

European Inventory of Existing Commercial Chemical Substances:

All components of this preparation are included in EINECS/ELINCS.

Aluminum oxide (non-fibrous)	2156916
Copper oxide	2152691
Zinc oxide	2152225

Council of European Communities Directive on Classification, Packaging and Labelling of Dangerous Substances/Preparation (67/548/EEC & 88/379/EEC):

R43	May cause sensitization by skin contact.
R45	May cause cancer.
S22	Do not breathe dust.
S37/39	Wear suitable gloves and eye/face protection.
T	Toxic

Canada

Canadian Hazard Products Act:

This product is classified as a material causing other toxic effects, carcinogenicity - Class D, Division 2, Subdivision A, under regulations pursuant to the Federal Hazardous Products Act (*e.g.* WHMIS).

Revision 2

Summary of Changes:	Updated for three-year review cycle.
I.D./Form:	MS0001
Supersedes:	February 1996

Revision 3

Summary of Changes:	Section 2.
I.D./Form:	MS0001
Supersedes:	December 2006

Revision 4

Summary of Changes:	Section 1.
I.D./Form:	MS0001
Supersedes:	July 2007

HMIS™ - Hazardous Materials Identification System

HMIS™ Ratings	
HEALTH	1*
FLAMMABILITY	0
REACTIVITY	0

0 - minimal hazard
1 - slight hazard
2 - moderate hazard
3 - serious hazard
4 - severe hazard
* - may cause cancer

MATERIAL SAFETY DATA SHEET

1 Product and Company Identification

Product Name: **Sulfur Trap**

Company Name:

VICI® Metronics Inc
26272 Twelve Trees Ln NW
Poulsbo, WA 98370

Emergency Contact Number
11-877-737-1887 or 1-360-697-9199

2 Composition

Ingredient	CAS No.	Wt%	ACGIH TLB-TWA	OSHA PEL-TWA
Silicon oxide (synthetic)	7631-86-9	< 60	10 mg/m^3 Inhalable 3 mg/m^3 Respirable	15 mg/m^3 Total dust 5 mg/m^3 Respirable fraction
Aluminum oxide (non-fibrous)	1344-28-1	< 50	10 mg/m^3	15 mg/m^3 Total dust 5 mg/m^3 Respirable dust
Copper	7440-50-8	< 50	1 mg/m^3 (TWA) for copper dusts and mists as Cu	1 mg/m^3 (TWA) for copper dusts and mists as Cu
Sodium oxide	1313-59-3	< 10	N/E	N/E
Zinc oxide	1314-13-2	< 10	15 mg/m^3 for total dust	10 mg/m^3 total dust
Water	7732-18-5	< 5	N/E	N/E
Silver oxide	20667-12-3	< 2	0.01 mg/m^3 as Ag	0.01 mg/m^3 as Ag
Iron oxide	1309-37-1	< 2	5 mg/m^3 as Fe dust and fume	10 mg/m^3 as Fe dust and fume
Magnesium oxide	1309-48-4	< 2	10 mg/m^3 Fume	15 mg/m^3 Fume, total particulate

Abbreviations:

N/E - None established
CAS - Chemical Abstracts Service
ACGIH - American Conference of Governmental Industrial Hygienists
TLV - Threshold Limit Value
OSHA - Occupational Safety and Health Administration - USA
TWA - Time Weighted Average
PEL - Permissible Exposure Limit
STEL - Short-Term Exposure Limit

3 Hazard Identification

Emergency Overview

This product is in a sealed container. Exposure can only take place if the integrity of the container is compromised. In case the container is opened, the contained product can cause irritation to the eyes, skin, or upper respiratory system.

Potential Health Effects

Primary Routes of Exposure: The product is in a sealed container. As long as the container is not opened, exposure should not take place.

Skin Contact: Exposure to Copper may cause allergic skin reactions.

Eye Contact: Dust and/or product may cause eye discomfort and/or irritation seen as tearing and reddening.

Ingestion: This product is considered to have a low order of oral toxicity.

Inhalation: Inhalation of product and/or dust may cause irritation of the respiratory system.

Target Organ: If the sealed container is opened, prolonged or repeated exposure may cause lung injury.

Carcinogenicity Classification

International Agency for Research on Cancer (LARC)

Silicon oxide (synthetic) - Not classifiable as human carcinogen (Group 3)
Iron oxide - Not classifiable as human carcinogen (Group 3).

U.S. National Toxicology Program (NTP)

Not Regulated

U.S. Occupational Safety and Health Administration (OSHA)

Neither the product nor the component(s) are classified or regulated.

4 First Aid Measures

Skin Contact: Wash affected area with soap and water. If irritation develops, obtain medical attention.

Eye Contact: Flush with water for at least 15 minutes. If irritation occurs, obtain medical attention.

Ingestion: Do not induce vomiting. Obtain medical attention.

Inhalation: Remove affected person to fresh air. If respiratory problems develop, obtain medical attention.

Notes to Physician: Hydrocarbons and other materials that contact the product during normal use can be retained on the product. The retained materials may be hazardous. Identify the retained material and treat accordingly.

5 Fire Fighting Measures

Flash Point: Unused material will not burn.

Extinguishing Media: Use media appropriate for surrounding fire.

Fire and Explosion Hazards: Used material may contain materials of a hazardous nature. The user of this product must identify the hazards of the retained material and inform the fire fighters of these hazards.

6 Accidental Release Measures

Large Spill: Isolate the affected areas. Confine entry into the affected area to those persons properly protected. Special attention should be given to eye, skin and respiratory protection because recovery of dry product is expected to generate dust. Sweep, shovel, or vacuum spilled product into appropriate containers. (Do not use a vacuum if material has contacted a hydrocarbon material.)

Small Spill: Sweep or vacuum spilled product into appropriate container. (Do not use a vacuum if material has contacted a hydrocarbon.) Product should be disposed in accordance with all applicable government regulations. See section 13 of MSDS, Disposal Information.

7 Handling and Storage

The product is in sealed containers. In the event the seal on the container is breached, store the product in tightly closed, properly labeled containers. Store out of direct sunlight. Store in dry area.

8 Exposure Controls and Personal Protection

Respiratory Protection: Product is in a sealed container. As long as the seal on the container is not breached, respiratory protection is not needed. If the container seal is breached and natural ventilation is inadequate, use mechanical ventilation, other engineering controls, or a toxic dust respirator (in USA - NIOSH/MSHA approved) to prevent inhalation of product dust.

Skin Protection: Use gloves to avoid prolonged or repeated skin contact.

Eye Protection: Safety glasses or goggles as necessary to prevent eye contact.

9 Physical and Chemical Properties

These data do not represent technical or sales specifications.

Appearance:	Material is in a sealed container
Odor:	None
pH:	Not applicable
% Volatile:	Not applicable
Pour Point:	Not applicable
Viscosity:	Not applicable
Vapor Density:	Not applicable
Specific Gravity:	Not applicable
Apparent Bulk Density:	Not available
Solubility in Water:	Negligible
Boiling Point:	Not applicable
Freezing Point:	Not applicable
Melting Point:	Not applicable
Vapor Pressure	Not applicable

10 Stability

Stability:	Stable.
Conditions to Avoid:	The addition of moisture (water) without flooding can cause rise in temperature from heat of adsorption. Contact with skin might result in burns.
Hazardous Decomposition Products:	Hydrocarbons and other materials that contact the product during normal use can be retained on the product. It is reasonable to expect that decomposition products will come from these retained materials of use.
Hazardous Polymerization:	Will not occur.
Incompatible Materials:	Sudden contact with high concentrations of chemicals having high heats of adsorption such as olefins, HC1, etc.

11 Toxicological Information

Acute Oral Toxicity:	An oral LD_{50} is not available for this product.
Acute Dermal Toxicity:	A dermal LD_{50} is not available for this product.
Acute Inhalation Toxicity:	An inhalation LC_{50} is not available for this product
Irritation:	No data for this product.

Additional Toxicological Information:

Aluminum oxide:	Inhalation of finely divided particles may cause lung damage. Intrapleural TD_{LO}: 90 mg/kg (rat). Implant TD_{LO}: 200 mg/kg (rat). TD_{LO} is Toxic Dose Low.
Silicon oxide:	Exposure can cause lung disease called silicosis, with cough and shortness of breath.

12 Ecological Information

No data is available for the product.

13 Disposal Information

Dispose of the product in accordance with all applicable government regulations. This product (in its fresh unused state) is not listed by generic name or trademark name in the U.S. EPA's Resource Conservation and Recovery Act (RCRA) Hazardous Waste Management Regulations and does not possess any of the four identifying characteristics of hazardous waste (ignitability, corrosivity, reactivity, or toxicity).

14 Transportation Information

U.S. Department of Transportation Shipping Name:	Not regulated.
International Maritime Organization (IMO):	Not regulated.

United States

TSCA *(Toxic Substances Control Act):*

All the ingredients of this mixture are listed on the TSCA Chemical Substance Inventory.

CERCLA *(Comprehensive Environmental Response, Compensation, and Liability Act) Reportable Quantity:*

The following component(s) of this product is/are subject to release reporting under 40 CFR 302 when release exceeds the Reportable Quantity (RQ):

Silver (and Silver Compounds) - RQ is 1000 lbs.

SARA *(Superfund Amendments and Reauthorization Act of 1986) Title III:*

Section 302 (Extremely Hazardous Substances):

The following component(s) of this product is/are subject to the emergency planning provisions of 40 CFR 355 when there are amounts equal or greater than the Threshold Planning Quantity (TPQ):

—None—

Section 313 (Toxic Chemicals):

The following component(s) have been specified as Toxic Chemicals under SARA Section 313 and may be subject to the Toxic Release Inventory (TRI) reporting requirements under 40 CFR 372:

Silver Compounds

European Union (EU)

European Inventory of Existing Commercial Chemical Substances:

All components of this preparation are included in EINECS/ELINCS.

Council of European Communities Directive on Classification, Packaging and Labelling of Dangerous Substances/Preparation (67/548/EEC & 88/379/EEC):

R43 May cause sensitization by skin contact.

S45 In case of accident or if you feel unwell, seek medical advice immediately.

S53 Avoid exposure - obtain special instruction before use.

Canada

Canadian Hazard Products Act:

This product is not classified as a controlled product under regulations pursuant to the federal Hazardous Product Act (*e.g.* WHMIS).

Revision 4

Summary of Changes:	Section 2
I.D./Form:	MS0012
Supersedes:	November 2005

Revision 5

Summary of Changes:	Section 1
I.D./Form:	MS0012
Supersedes:	July 2007

Revision 6

Summary of Changes:	Section 1
I.D./Form:	MS0012
Supersedes:	November 2008

HMIS™ - Hazardous Materials Identification System

HMIS™ Ratings	
HEALTH	1
FLAMMABILITY	0
REACTIVITY	0

0 - minimal hazard
1 - slight hazard
2 - moderate hazard
3 - serious hazard
4 - severe hazard

MATERIAL SAFETY DATA SHEET

1 Product and Company Identification

Product Name: **Mercury Trap**

Company Name:

VICI® Metronics Inc
26272 Twelve Trees Ln NW
Poulsbo, WA 98370

Emergency Contact Number
1-877-737-1887 or 1-360-697-9199

2 Composition

Ingredient	CAS No.	Wt%	ACGIH TLB-TWA	OSHA PEL-TWA
Silicon oxide (synthetic)	7631-86-9	< 60	10 mg/m^3 Inhalable 3 mg/m^3 Respirable	15 mg/m^3 Total dust 5 mg/m^3 Respirable fraction
Aluminum oxide (non-fibrous)	1344-28-1	< 50	10 mg/m^3	15 mg/m^3 Total dust 5 mg/m^3 Respirable dust
Sodium oxide	1313-59-3	< 10	N/E	N/E
Potassium oxide	12136-45-7	< 5	N/E	N/E
Calcium oxide	1305-78-8	< 2	2 mg/m^3	5 mg/m^3
Iron oxide	1309-37-1	< 2	5 mg/m^3 as Fe dust and fume	10 mg/m^3 as Fe dust and fume
Magnesium oxide	1309-48-4	< 2	10 mg/m^3 Fume	15 mg/m^3 Fume, total particulate

Abbreviations:

N/E - None established
CAS - Chemical Abstracts Service
ACGIH - American Conference of Governmental Industrial Hygienists
TLV - Threshold Limit Value
OSHA - Occupational Safety and Health Administration - USA
TWA - Time Weighted Average
PEL - Permissible Exposure Limit
STEL - Short-Term Exposure Limit

3 Hazard Identification

Emergency Overview

This product is in a sealed container. Exposure can only take place if the integrity of the container is compromised. In case the container is opened, the contained product can cause irritation to the eyes, skin, or upper respiratory system.

Potential Health Effects

Primary Routes of Exposure: The product is in a sealed container. As long as the container is not opened, exposure should not take place.

Skin Contact: Exposure to Copper may cause allergic skin reactions.

Eye Contact: Dust and/or product may cause eye discomfort and/or irritation seen as tearing and reddening.

Ingestion: This product is considered to have a low order of oral toxicity.

Inhalation: Inhalation of product and/or dust may cause irritation of the respiratory system.

Target Organ: If the sealed container is opened, prolonged or repeated exposure may cause lung injury.

Carcinogenicity Classification

International Agency for Research on Cancer (LARC)

Silicon oxide (synthetic) - Not classifiable as human carcinogen (Group 3)
Iron oxide - Not classifiable as human carcinogen (Group 3).

U.S. National Toxicology Program (NTP)

Not Regulated

U.S. Occupational Safety and Health Administration (OSHA)

Neither the product nor the component(s) are classified or regulated.

4 First Aid Measures

Skin Contact: Wash affected area with soap and water. If irritation develops, obtain medical attention.

Eye Contact: Flush with water for at least 15 minutes. If irritation occurs, obtain medical attention.

Ingestion: Do not induce vomiting. Obtain medical attention.

Inhalation: Remove affected person to fresh air. If respiratory problems develop, obtain medical attention.

Notes to Physician: Hydrocarbons and other materials that contact the product during normal use can be retained on the product. The retained materials may be hazardous. Identify the retained material and treat accordingly.

5 Fire Fighting Measures

Flash Point: Unused material will not burn.

Extinguishing Media: Use media appropriate for surrounding fire.

Fire and Explosion Hazards: Used material may contain materials of a hazardous nature. The user of this product must identify the hazards of the retained material and inform the fire fighters of these hazards.

6 Accidental Release Measures

Large Spill: Isolate the affected areas. Confine entry into the affected area to those persons properly protected. Special attention should be given to eye, skin and respiratory protection because recovery of dry product is expected to generate dust. Sweep, shovel, or vacuum spilled product into appropriate containers. (Do not use a vacuum if material has contacted a hydrocarbon material.)

Small Spill: Sweep or vacuum spilled product into appropriate container. (Do not use a vacuum if material has contacted a hydrocarbon.) Product should be disposed in accordance with all applicable government regulations. See section 13 of MSDS, Disposal Information.

7 Handling and Storage

The product is in sealed containers. In the event the seal on the container is breached, store the product in tightly closed, properly labeled containers. Store out of direct sunlight. Store in dry area.

8 Exposure Controls and Personal Protection

Respiratory Protection: Product is in a sealed container. As long as the seal on the container is not breached, respiratory protection is not needed. If the container seal is breached and natural ventilation is inadequate, use mechanical ventilation, other engineering controls, or a toxic dust respirator (in USA - NIOSH/MSHA approved) to prevent inhalation of product dust.

Skin Protection: Use gloves to avoid prolonged or repeated skin contact.

Eye Protection: Safety glasses or goggles as necessary to prevent eye contact.

9 Physical and Chemical Properties

These data do not represent technical or sales specifications.

Appearance:	Material is in a sealed container
Odor:	None
pH:	Not applicable
% Volatile:	Not applicable
Pour Point:	Not applicable
Viscosity:	Not applicable
Vapor Density:	Not applicable
Specific Gravity:	Not applicable
Apparent Bulk Density:	Not available
Solubility in Water:	Negligible
Boiling Point:	Not applicable
Freezing Point:	Not applicable
Melting Point:	Not applicable
Vapor Pressure	Not applicable

10 Stability

Stability:	Stable.
Conditions to Avoid:	The addition of moisture (water) without flooding can cause rise in temperature from heat of adsorption. Contact with skin might result in burns.
Hazardous Decomposition Products:	Hydrocarbons and other materials that contact the product during normal use can be retained on the product. It is reasonable to expect that decomposition products will come from these retained materials of use.
Hazardous Polymerization:	Will not occur.
Incompatible Materials:	Sudden contact with high concentrations of chemicals having high heats of adsorption such as olefins, HC1, etc.

11 Toxicological Information

Acute Oral Toxicity:	An oral LD_{50} is not available for this product.
Acute Dermal Toxicity:	A dermal LD_{50} is not available for this product.
Acute Inhalation Toxicity:	An inhalation LC_{50} is not available for this product
Irritation:	No data for this product.

Additional Toxicological Information:

Aluminum oxide:	Inhalation of finely divided particles may cause lung damage. Intrapleural TD_{LO}: 90 mg/kg (rat). Implant TD_{LO}: 200 mg/kg (rat). TD_{LO} is Toxic Dose Low.
Silicon oxide:	Exposure can cause lung disease called silicosis, with cough and shortness of breath.

12 Ecological Information

No data is available for the product.

13 Disposal Information

Dispose of the product in accordance with all applicable government regulations. This product (in its fresh unused state) is not listed by generic name or trademark name in the U.S. EPA's Resource Conservation and Recovery Act (RCRA) Hazardous Waste Management Regulations and does not possess any of the four identifying characteristics of hazardous waste (ignitability, corrosivity, reactivity, or toxicity).

14 Transportation Information

U.S. Department of Transportation Shipping Name:	Not regulated.
International Maritime Organization (IMO):	Not regulated.

15 Regulatory Information

United States

TSCA *(Toxic Substances Control Act):*

All the ingredients of this mixture are listed on the TSCA Chemical Substance Inventory.

CERCLA *(Comprehensive Environmental Response, Compensation, and Liability Act) Reportable Quantity:*

The following component(s) of this product is/are subject to release reporting under 40 CFR 302 when release exceeds the Reportable Quantity (RQ):

Silver (and Silver Compounds) - RQ is 1000 lbs.

SARA *(Superfund Amendments and Reauthorization Act of 1986) Title III:*

Section 302 (Extremely Hazardous Substances):

The following component(s) of this product is/are subject to the emergency planning provisions of 40 CFR 355 when there are amounts equal or greater than the Threshold Planning Quantity (TPQ):

—None—

Section 313 (Toxic Chemicals):

The following component(s) have been specified as Toxic Chemicals under SARA Section 313 and may be subject to the Toxic Release Inventory (TRI) reporting requirements under 40 CFR 372:

Silver Compounds

European Union (EU)

European Inventory of Existing Commercial Chemical Substances:

All components of this preparation are included in EINECS/ELINCS.

Council of European Communities Directive on Classification, Packaging and Labelling of Dangerous Substances/Preparation (67/548/EEC & 88/379/EEC):

R43 May cause sensitization by skin contact.

S45 In case of accident or if you feel unwell, seek medical advice immediately.

S53 Avoid exposure - obtain special instruction before use.

Canada

Canadian Hazard Products Act:

This product is not classified as a controlled product under regulations pursuant to the federal Hazardous Product Act (*e.g.* WHMIS).

16 Other Information

Revision 4

Summary of Changes:	Section 2
I.D./Form:	MS0014
Supersedes:	November 2005

Revision 5

Summary of Changes:	Section 1
I.D./Form:	MS0014
Supersedes:	April 2008

HMIS™ - Hazardous Materials Identification System

HMIS™ Ratings	
HEALTH	0
FLAMMABILITY	0
REACTIVITY	0

0 - minimal hazard
1 - slight hazard
2 - moderate hazard
3 - serious hazard
4 - severe hazard

VICI

Valco Instruments Co. Inc.

CE

Declaration of Conformity

Manufacturer:	Valco Instruments Co. Inc. 7811 Westview Drive Houston, Texas 77055 USA Telephone: (713) 688-9345 Fax: (713) 688-3948 Email: valco@vici.com

Valco Instruments Co. Inc. declares that the product specified herein

Product name:	He/N_2 Gas Purifier
Model number:	HP2, HPM, NP2, NPM
Product options:	All

in accordance with the directive:	73/23/EEC 89/336/EEC

is in compliance with the following:

Product Safety Standards:	EN61010-1:2001
EMC Standards:	EN61326:A1:1998 + A2:2001

International contact:	VICI AG (Valco International) Parkstrasse 2 CH-6214 Schenkon Switzerland Telephone: Int + 41-41-925-6200 Fax: Int + 41-41-925-6201 Email: info@vici.ch

S. D. Stearns, president

8-19-2004

Date

VICI
Valco Instruments Co. Inc.

Helium Purifier and Nitrogen Purifier Instruction Manual

For item numbers:
HP2
HP2-220
NP2
NP2-220
I-23572HP2
I-23572NP2

HP2w.p65
Rev. 1/11
Printed in USA

Introduction

The Valco Helium Purifier (HP2) and Nitrogen Purifier (NP2) provide "point-of-use" carrier gas purification to sub-ppm levels of gaseous impurities. Designed originally for the Valco Trace Gas Analysis system with its Helium Ionization Detectors, the Helium Purifier provides point-of-use ultrahigh-purity helium for use in any chromatographic application requiring high-quality helium or other noble gas (Ar, Ne, Kr, Xe). The Nitrogen Purifier was developed for use with our Electron Capture Detector.

Specifications

	Helium Purifier (HP2)	**Nitrogen Purifier (NP2)**
Gases purified	He, Ne, Ar, Kr, Xe, Rn	He, Ne, Ar, Kr, Xe, Rn, N_2
Max. operating pressure	1000 psig	1000 psig
Max. operating temperature	400°C	400°C
Max. flow rate	1 liter/min	1 liter/min
Impurities removed	Outlet impurities less than 10 ppb H_2O, H_2, O_2, N_2, NO, NH_3, CO, and CO_2, based on 10 ppm total inlet impurities. Other impurities removed include CF_4, CCl_4, SiH_4, and hydrocarbons such as CH_4	Outlet impurities less than 10 ppb H_2O, H_2, O_2, NO, NH_3, CO, and CO_2, based on 10 ppm total inlet impurities. Other impurities removed include CF_4, CCl_4, SiH_4, and hydrocarbons
Impurities not removed	He, Ne, Ar, Kr, Xe, and Rn	He, Ne, Ar, Kr, Xe, Rn, CH_4, and N_2

WARNING!
This product is *not for use with oxygen* – either pure oxygen or gases with a significant proportion of oxygen. The purifier's gettering alloy is *pyrophoric at operating temperature*. Use with significant amounts of oxygen can result in combustion of the material, potential damage to the surrounding area, and possible injury.

In no event shall Valco Instruments Co. Inc. be liable for any direct, indirect, special, incidental, or consequential damage, whether based on contract, tort, or any other legal theory and whether advised of the possibility of such damages.

Theory of Operation

The purification substrate in the Valco purifiers is a non-evaporable gettering alloy, with a nominal composition of zirconium, vanadium, and iron. This alloy must be heated so that the oxide layers on the particle surface are eliminated. This process must be performed under a vacuum or in at atmosphere of helium (for the HP2) or nitrogen (for the NP2).

Although the gettering alloy will purify even at ambient temperatures, raising the temperature vastly improves the life span and efficiency of the alloy. However, the elevated temperature causes hydrogen generation, which is trapped only at temperatures below 250°C. Therefore the Valco purifiers have been designed to operate at a fixed temperature gradient which yields a long life span and high efficiency and insures that any hydrogen generated will be trapped.

Accurate temperatures at the inlet (380-400°C) and at the outlet (170-190°C) are maintained with the use of a precision 24 VDC power supply.

Power Supply Requirements

As stated on the purifier, the power supply must conform to EN 61010-1: Section F.2.1 Limited circuit. This section mandates that the power source must be limited to 42.4 VDC or less (open circuit). In addition, the energy must be limited by one of the following means:

- the current under any condition of load, including short circuit, is not more than 8A measured after 1 minute of operation
- the source is *rated* or set to limit its power to 150 VA under any condition of load
- an overload protector or circuit component opens to interrupt the power output at a lower value than 150 VA under any condition including short circuit

The power supply is critical for safe and proper operation of this unit. It is therefore recommended that the purifer be used only with the power supply received with it.

Installation and Operation

This procedure describes a chromatographic installation. Although that is not the only possible application, it is the most common. It is up to the user to determine whether the purifier is suitable for a particular application based upon the specifications of the purifier.

Installation

The Valco HP2 and NP2 are two part systems comprised of the purifier and the power supply. The purifier must be installed in a vertical position to eliminate the possibility of channeling. For best results, do not modify the fittings or tubing lengths; small particles which might be generated by such modifications are difficult to remove and can restrict the flow.

1. Connect the input line (tagged INLET) to a carrier gas cylinder with a high purity regulator. (Save the caps to seal the purifier whenever you remove it from the system.)
2. Purge the system for 15 to 30 minutes at 20 to 30 mL/min to eliminate air from the getter material.

CAUTION: The getter material should never be heated when air is present.

3. Connect the barrel connector of the power supply to the purifier.
4. Connect the power supply to mains (115/230 VAC). The LED on the power supply should come on to confirm power output.
5. Connect the purifier output line to the chromatographic system's carrier gas input line using a 1/16" union (Valco Product Number ZU1).

Activation

When the purifier reaches operating temperature (usually in about 2½ hours) the getter will be activated. Once the getter is activated, active gaseous impurities such as H_2, O_2, H_2O, CO, and CO_2 (plus N_2 for the HP2) are captured and chemisorbed on the getter surface. Only noble gas atoms are not affected. Once adsorbed, oxygen, carbon, and nitrogen atoms cannot be released by the getter material even at its melting point (1400°C), due to the formation of strong chemical bonds with the alloy atoms.

Hydrogen atoms behave quite differently, diffusing into the getter material bulk more quickly than the other atoms and becoming almost uniformly distributed within the bulk. However, hydrogen sorption occurs below 250°C, achieved through the temperature gradient of the trap assembly.

Operation

In normal operation the outside temperature of the purifier is warm, but should not be uncomfortable to the touch. The 24 VDC power supply maintains the purifier trap at a constant temperature, and should be located so that the illuminated LED can serve as a visual indicator of purifier operation.

Removing the HP2 or NP2 from the System

To remove the purifier from the carrier gas line:

1. Disconnect the power supply. Disconnect the output line from the instrument while maintaining carrier flow.
2. Allow several hours for the the getter oven to cool. After the oven reaches ambient temperature, cap the output line and allow the purifier to be pressurized for several minutes.
3. Remove the input line and immediately cap it. This maintains a carrier gas atmosphere on the gettering substrate, increasing its lifetime.

To reinstall, follow the instructions in the **Installation** section at the top of page 3.

Routine Maintenance

Do not open or modify the trap assembly.

In normal usage there is no maintenance required on the purifier or power supply. If the purifier shows signs of saturation it will need replacement. Replacement cartridges can be ordered from Valco using the product numbers below.

For an HP2:	I-23572HP2
For an NP2:	I-23572NP2

Replacing the Getter Cartridge

1. Disconnect the power supply from the purifier, but leave the helium flow on.
2. Allow at least two hours for the purifier to cool.
3. Using a thin-edged screwdriver or knife, remove the two hole plugs from the side of the unit and one from the top.
4. The side holes allow access to the two screws which secure the trap. With a 5/32" allen wrench, turn each screw counterclockwise one to two rotations.
5. If the trap is still too hot to the touch, allow more cooling time. If it can be handled, pull it out through the hole in the top of the unit.
6. Disconnect the output line at the fitting, and cap it to allow the trap to pressurize.
7. Have a second cap at the ready. Disconnect the input line at the fitting, and cap it immediately.
8. Insert the new trap, making sure the insulation and feed-through hole plug are snug against the top of the trap. Push the trap assembly down until the feed-through hole plug is resting on the top of the unit.
9. Tighten both allen screws, making sure the trap does not move.
10. Snap in the feed-through hole plug, and both the side hole plugs.
11. Refer to the **Installation** section at the top of page 3 to get the system back in operation.

Disposing of Spent Getter Cartridges

Obtain a return authorization number from VICI by emailing tga@vici.com or calling 800-367-8424. The packaged getter cartridge should be clearly marked “Traps for Disposal”.

Technical Drawings

REVISIONS			
LTR	DESCRIPTION	DATE	INITIATED
A	NEW DWG. GETTER REDESIGN (HP2) ECN #4015	17DEC97	S.WERNER
B	ECN# 4908 CHANGE ITEM 7 TO 1" WIDE (1.5")	24SEP99	JDURR

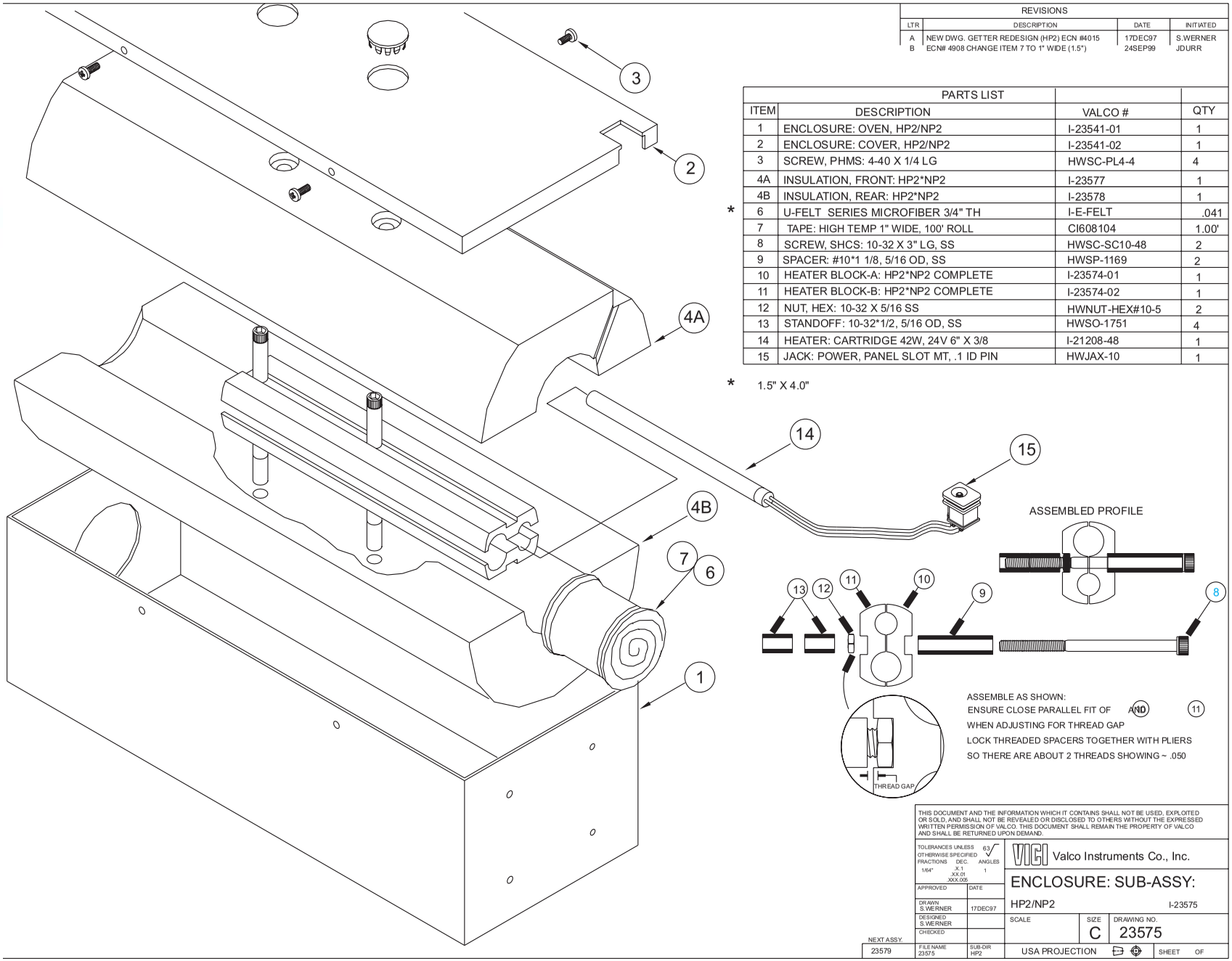

PARTS LIST			
ITEM	DESCRIPTION	VALCO #	QTY
1	ENCLOSURE: OVEN, HP2/NP2	I-23541-01	1
2	ENCLOSURE: COVER, HP2/NP2	I-23541-02	1
3	SCREW, PHMS: 4-40 X 1/4 LG	HWSC-PL4-4	4
4A	INSULATION, FRONT: HP2*NP2	I-23577	1
4B	INSULATION, REAR: HP2*NP2	I-23578	1
* 6	U-FELT SERIES MICROFIBER 3/4" TH	I-E-FELT	.041
7	TAPE: HIGH TEMP 1" WIDE, 100' ROLL	CI608104	1.00'
8	SCREW, SHCS: 10-32 X 3" LG, SS	HWSC-SC10-48	2
9	SPACER: #10*1 1/8, 5/16 OD, SS	HWSP-1169	2
10	HEATER BLOCK-A: HP2*NP2 COMPLETE	I-23574-01	1
11	HEATER BLOCK-B: HP2*NP2 COMPLETE	I-23574-02	1
12	NUT, HEX: 10-32 X 5/16 SS	HWNUT-HEX#10-5	2
13	STANDOFF: 10-32*1/2, 5/16 OD, SS	HWSO-1751	4
14	HEATER: CARTRIDGE 42W, 24V 6" X 3/8	I-21208-48	1
15	JACK: POWER, PANEL SLOT MT, .1 ID PIN	HWJAX-10	1

* 1.5" X 4.0"

ASSEMBLE AS SHOWN:
ENSURE CLOSE PARALLEL FIT OF AND 11
WHEN ADJUSTING FOR THREAD GAP
LOCK THREADED SPACERS TOGETHER WITH PLIERS
SO THERE ARE ABOUT 2 THREADS SHOWING ~ .050

TOLERANCES UNLESS OTHERWISE SPECIFIED 63√
FRACTIONS 1/64" DEC. X.1 XX.01 XXX.005 ANGLES 1

Valco Instruments Co., Inc.

ENCLOSURE: SUB-ASSY:
HP2/NP2 I-23575

APPROVED	DATE		
DRAWN S.WERNER	17DEC97	SCALE	SIZE C / DRAWING NO. 23575
DESIGNED S.WERNER			
CHECKED			
NEXT ASSY. 23579	FILE NAME 23575	SUB-DIR HP2	USA PROJECTION / SHEET OF

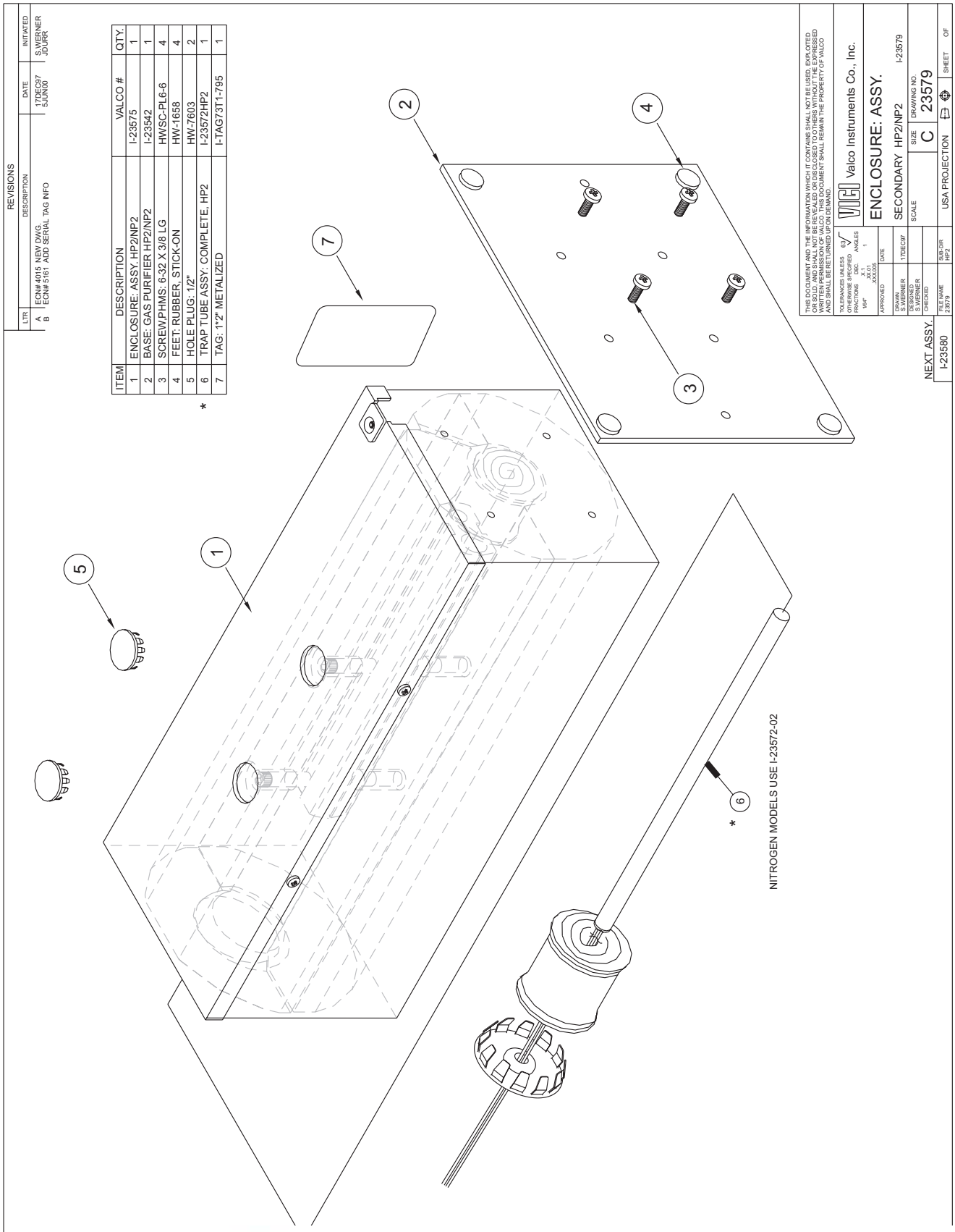
REVISIONS
LTR
DESCRIPTION
DATE
INITIATED
A ECN# 4015 NEW DWG. 17DEC97 S.WERNER
B ECN# 5161 ADD SERIAL TAG INFO 5JUN00 JDURR
ITEM DESCRIPTION VALCO # QTY.
1 ENCLOSURE: ASSY. HP2/NP2 I-23575 1
2 BASE: GAS PURIFIER HP2/NP2 I-23542 1
3 SCREW,PHMS: 6-32 X 3/8 LG HWSC-PL6-6 4
4 FEET: RUBBER, STICK-ON HW-1658 4
5 HOLE PLUG: 1/2" HW-7603 2
6 TRAP TUBE ASSY: COMPLETE, HP2 I-23572HP2 1
7 TAG: 1"2" METALIZED I-TAG73T1-795 1
*
NITROGEN MODELS USE I-23572-02
THIS DOCUMENT AND THE INFORMATION WHICH IT CONTAINS SHALL NOT BE USED, EXPLOITED OR SOLD, AND SHALL NOT BE REVEALED OR DISCLOSED TO OTHERS WITHOUT THE EXPRESSED WRITTEN PERMISSION OF VALCO INSTRUMENTS. THIS DOCUMENT SHALL REMAIN THE PROPERTY OF VALCO AND SHALL BE RETURNED UPON DEMAND.
TOLERANCES UNLESS OTHERWISE SPECIFIED
FRACTIONS 1/64"
DEC. X.X ±.01 XX.X ±.005
ANGLES 1°
APPROVED
DATE
DRAWN S.WERNER 17DEC97
DESIGNED S.WERNER
CHECKED
FILE NAME 23579
SUB-DIR HP2
Valco Instruments Co., Inc.
ENCLOSURE: ASSY.
SECONDARY HP2/NP2
I-23579
SCALE
SIZE C
DRAWING NO. 23579
USA PROJECTION
SHEET OF
NEXT ASSY.
I-23580

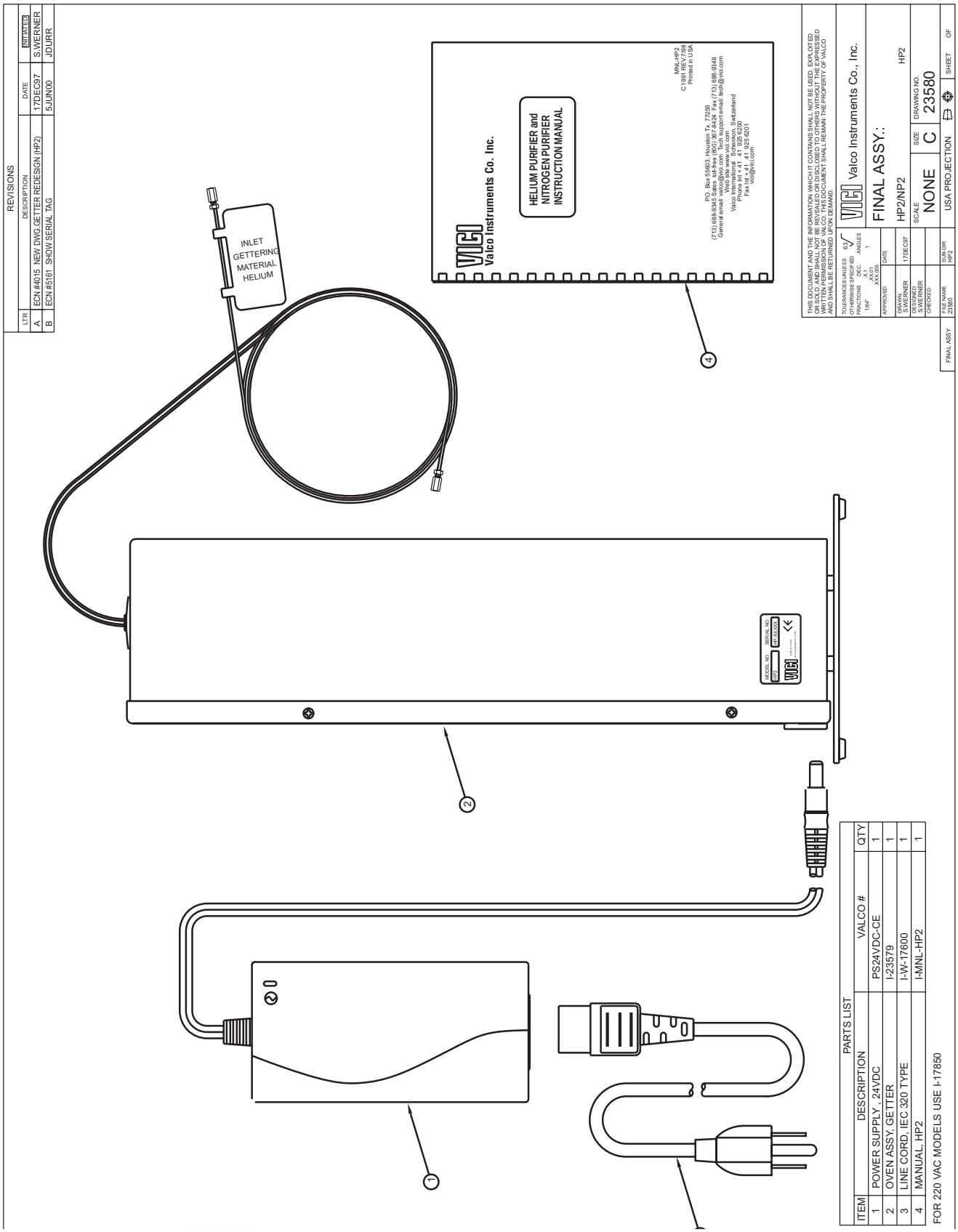
REVISIONS
LTR DESCRIPTION DATE
A ECN #4015 NEW DWG.GETTER REDESIGN (HP2) 17DEC97 S.WERNER
B ECN #5161 SHOW SERIAL TAG 5JUN00 JDURR
INLET GETTERING MATERIAL HELIUM
VICI Valco Instruments Co. Inc.
HELIUM PURIFIER and NITROGEN PURIFIER INSTRUCTION MANUAL
MNL-HP2
C1991 REV.7/98
Printed in USA
P.O. Box 55603, Houston Tx. 77255
(713) 688-9345 Sales toll-free (800) 367-8424 Fax (713) 688-8048
General email: valco@vici.com Technical support email: tech@vici.com
Web site www.vici.com
Valco International Schenkon, Switzerland
Phone Int.+41 41 925 6000
Fax Int.+41 41 925 6001
vici@vici.com
MODEL NO. HP2
SERIAL NO. HP-XXXXX
THIS DOCUMENT AND THE INFORMATION WHICH IT CONTAINS SHALL NOT BE USED, EXPLOITED OR SOLD, AND SHALL NOT BE REVEALED OR DISCLOSED TO OTHERS WITHOUT THE EXPRESSED WRITTEN AUTHORIZATION OF VALCO. THIS DOCUMENT SHALL REMAIN THE PROPERTY OF VALCO AND SHALL BE RETURNED UPON DEMAND.
TOLERANCE UNLESS OTHERWISE SPECIFIED
FRACTIONS 1/64" DEC. XX ±1 XXX ±0.005 ANGLES 1
APPROVED
DRAWN S.WERNER 17DEC97
DESIGNED S.WERNER
CHECKED
Valco Instruments Co., Inc.
FINAL ASSY.:
HP2/NP2
SCALE NONE
SIZE C
DRAWING NO. 23580
USA PROJECTION
SHEET OF
FINAL ASSY
FILE NAME 23580
SUB.DWG. HP2
PARTS LIST
ITEM DESCRIPTION VALCO # QTY
1 POWER SUPPLY , 24VDC PS24VDC-CE 1
2 OVEN ASSY, GETTER I-23579 1
3 LINE CORD, IEC 320 TYPE I-W-17600 1
4 MANUAL, HP2 I-MNL-HP2 1
FOR 220 VAC MODELS USE I-17850

Warranty

This Limited Warranty gives the Buyer specific legal rights, and a Buyer may also have other rights that vary from state to state. For a period of 365 calendar days from the date of shipment, Valco Instruments Company, Inc. (hereinafter Seller) warrants the goods to be free from defect in material and workmanship to the original purchaser. During the warranty period, Seller agrees to repair or replace defective and/or nonconforming goods or parts without charge for material or labor, or, at the Seller's option, demand return of the goods and tender repayment of the price. Buyer's exclusive remedy is repair or replacement of defective and nonconforming goods, or, at Seller's option, the repayment of the price.

Seller excludes and disclaims any liability for lost profits, personal injury, interruption of service, or for consequential incidental or special damages arising out of, resuiting from, or relating in any manner to these goods

This Limited Warranty does not cover defects, damage, or nonconformity resulting from abuse, misuse, neglect, lack of reasonable care, modification, or the attachment of improper devices to the goods. This Limited Warranty does not cover expendable items. This warranty is VOID when repairs are performed by a nonauthorized service center or representative. For information about authorized service centers or representatives, write Customer Repairs, Valco Instruments Company, Inc, P.O. Box 55603, Houston, Texas 77255, or phone (713) 688-9345. At Seller's option, repairs or replacements will be made on site or at the factory. If repairs or replacements are to be made at the factory, Buyer shall return the goods prepaid and bear all the risks of loss until delivered to the factory. If Seller returns the goods, they will be delivered prepaid and Seller will bear all risks of loss until delivery to Buyer. Buyer and Seller agree that this Limited Warranty shall be governed by and construed in accordance with the laws of the State of Texas.

The warranties contained in this agreement are in lieu of all other warranties expressed or implied, including the warranties of merchantability and fitness for a particular purpose.

This Limited Warranty supercedes all prior proposals or representations oral or written and constitutes the entire understanding regarding the warranties made by Seller to Buyer. This Limited Warranty may not be expanded or modified except in writing signed by the parties hereto.

VICI

Valco Instruments Co. Inc.

Miniature Helium Purifier and Nitrogen Purifier Instruction Manual

For item numbers:
HPM
HPM-220
NPM
NPM-220

HPM.p65
1/11
Printed in USA

713 · 688 · 8106 fax
Int + 41 · 41 · 925 · 6201 fax

Website : www.chromtech.net.ay E-mail : info@chromtech.net.au TelNo : 03 9762 2034 . . . in AUSTRALIA

Table of Contents

Introduction

Virtually all commercial gas chromatographs contain certain components at levels which are unsuitable for low ppb universal analyses (although they may not be problematic for flame ionization and thermal conductivity detectors). For example, unheated molecular sieve traps are certain to contaminate the carrier gas with CO_2 and H_2O.

The VICI Miniature Helium Purifier (HPM) and Miniature Nitrogen Purifier (NPM) are designed to address this situation, providing "point-of-use" carrier gas purification to sub-ppm levels of gaseous impurities. When installed in a gas chromatograph's flow path immediately upstream of the injector, the HPM/NPM will remove any contaminants introduced by flow controllers, elastomeric tube seals, pressure regulators, crude traps, or other system components that are not completely clean and leak-tight.

The GC's actual carrier inlet should be supplied from the HP2 inert gas purifier which ships as part of the Valco pulsed discharge detector system. No other carrier purifiers, including oxygen, moisture, and hydrocarbon traps, should be used; they are likely to introduce one contaminant as they remove another.

WARNING!
This product is *not for use with oxygen* – either pure oxygen or gases with a significant proportion of oxygen. The purifier's gettering alloy is *pyrophoric at operating temperature*. Use with significant amounts of oxygen can result in combustion of the material, potential damage to the surrounding area, and possible injury.

In no event shall Valco Instruments Co. Inc. be liable for any direct, indirect, special, incidental, or consequential damage, whether based on contract, tort, or any other legal theory and whether advised of the possibility of such damages.

Specifications

	Helium Purifier (HP2)	Nitrogen Purifier (NP2)
Gases purified	He, Ne, Ar, Kr, Xe, Rn	He, Ne, Ar, Kr, Xe, Rn, N_2
Max. operating pressure	200 psig	200 psig
Max. operating temperature	400°C	400°C
Max. flow rate	30 cc/min	30 cc/min
Impurities removed	Outlet impurities less than 10 ppb H_2O, H_2, O_2, N_2, NO, NH_3, CO, and CO_2, based on 10 ppm total inlet impurities. Other impurities removed include CF_4, CCl_4, SiH_4, and hydrocarbons such as CH_4	Outlet impurities less than 10 ppb H_2O, H_2, O_2, NO, NH_3, CO, and CO_2, based on 10 ppm total inlet impurities. Other impurities removed include CF_4, CCl_4, SiH_4, and hydrocarbons
Impurities not removed	He, Ne, Ar, Kr, Xe, and Rn	He, Ne, Ar, Kr, Xe, Rn, CH_4, and N_2

Theory of Operation

The purification substrate in the Valco purifiers is a non-evaporable gettering alloy. The alloy must be heated so that the oxide layers on the particle surface are eliminated. This process must be performed under a vacuum or in at atmosphere of helium (for the HPM) or nitrogen (for the NPM).

Although the gettering alloy will purify even at ambient temperatures, raising the temperature vastly improves the life span and efficiency of the alloy. However, the elevated temperature causes hydrogen generation, which is trapped only at temperatures below 250°C. Accurate temperatures are maintained with the use of the precision 24 VDC power supply which is supplied with the HPM/NPM.

Power Supply Requirements

As stated on the purifier, the power supply must conform to EN 61010-1: Section F.2.1 Limited circuit. This section mandates that the power source must be limited to 42.4 VDC or less (open circuit). In addition, the energy must be limited by one of the following means:

- the current under any condition of load, including short circuit, is not more than 8A measured after 1 minute of operation
- the source is *rated* or set to limit its power to 150 VA under any condition of load
- an overload protector or circuit component opens to interrupt the power output at a lower value than 150 VA under any condition including short circuit

Installation and Operation

This procedure describes a chromatographic installation. Although that is not the only possible application, it is the most common. It is up to the user to determine whether the purifier is suitable for a particular application based upon the purifier's specifications.

Installation

The Valco HPM and NPM are two part systems comprised of the purifier and the power supply. The purifier can be installed in any position. For best results, do not modify the fittings or tubing lengths; small particles which might be generated by such modifications are difficult to remove and can restrict the flow.

1. Locate the HPM where the temperature will not exceed 40°C, and with at least a half inch of clearance around and above the purifier to prevent overheating.
2. Disconnect the carrier supply line immediately upstream of the injector and connect this line to the inlet of the purifier.
3. Connect the output line of the purifier to the injector.
4. Purge the system for 5 to 10 minutes at 20 to 30 mL/min to eliminate air from the getter material.

CAUTION: The getter material should never be heated when air is present.

5. Insert the barrel connector of the power supply into the purifier.
6. Connect the power supply to mains (115/230 VAC). The LED on the power supply should confirm power output.

Activation

When the purifier reaches operating temperature (usually in about 1 hour) the getter will be activated. Once the getter is activated, active gaseous impurities such as O_2, H_2O, CO, and CO_2 (plus N_2 for the HPM) are captured and chemisorbed on the getter surface. Only noble gas atoms are not affected. Once adsorbed, oxygen, carbon, and nitrogen atoms cannot be released by the getter material even at its melting point (1400°C), due to the formation of strong chemical bonds with the alloy atoms.

almost uniformly distributed within the bulk.

Operation

In normal operation the outside temperature of the purifier is warm, but should not be uncomfortable to the touch. The 24 VDC power supply maintains the purifier trap at a constant temperature, and should be located so that the illuminated LED can serve as a visual indicator of purifier operation.

Removing the HPM or NPM from the System

To remove the purifier from the carrier gas line:

1. Disconnect the power supply. Disconnect the output line from the instrument while maintaining carrier flow.
2. Allow about one hour for the purifier to cool. After it reaches ambient temperature, cap the output line and allow the purifier to be pressurized for several minutes.
3. Remove the input line and immediately cap it. This maintains a carrier gas atmosphere on the gettering substrate, increasing its lifetime.

To reinstall, follow the instructions in the **Installation** section at the top of page 3.

Routine Maintenance

Do not try to open or modify the purifier.

In normal usage there is no maintenance required on the purifier or power supply. If the purifier shows signs of saturation it will need replacement. Replacement purifiers can be ordered from Valco using the following product numbers:

For the helium purifier: HPM
For the nitrogen purifier: NPM

Disposing of the Purifier

Obtain a return authorization number from VICI by emailing tga@vici.com or calling 800-367-8424. The packaged purifier should be clearly marked “Traps for Disposal”.

Warranty

This Limited Warranty gives the Buyer specific legal rights, and a Buyer may also have other rights that vary from state to state. For a period of 365 calendar days from the date of shipment, Valco Instruments Company, Inc. (hereinafter Seller) warrants the goods to be free from defect in material and workmanship to the original purchaser. During the warranty period, Seller agrees to repair or replace defective and/or nonconforming goods or parts without charge for material or labor, or, at the Seller's option, demand return of the goods and tender repayment of the price. Buyer's exclusive remedy is repair or replacement of defective and nonconforming goods, or, at Seller's option, the repayment of the price.

Seller excludes and disclaims any liability for lost profits, personal injury, interruption of service, or for consequential incidental or special damages arising out of, resuiting from, or relating in any manner to these goods

This Limited Warranty does not cover defects, damage, or non-conformity resulting from abuse, misuse, neglect, lack of reasonable care, modification, or the attachment of improper devices to the goods. This Limited Warranty does not cover expendable items. This warranty is VOID when repairs are performed by a non-authorized service center or representative. For information about authorized service centers or representatives, write Customer Repairs, Valco Instruments Company, Inc, P.O. Box 55603, Houston, Texas 77255, or phone (713) 688-9345. At Seller's option, repairs or replacements will be made on site or at the factory. If repairs or replacements are to be made at the factory, Buyer shall return the goods prepaid and bear all the risks of loss until delivered to the factory. If Seller returns the goods, they will be delivered prepaid and Seller will bear all risks of loss until delivery to Buyer. Buyer and Seller agree that this Limited Warranty shall be governed by and construed in accordance with the laws of the State of Texas.

The warranties contained in this agreement are in lieu of all other warranties expressed or implied, including the warranties of merchantability and fitness for a particular purpose.

This Limited Warranty supercedes all prior proposals or representations oral or written and constitutes the entire understanding regarding the warranties made by Seller to Buyer. This Limited Warranty may not be expanded or modified except in writing signed by the parties hereto.

MATERIAL SAFETY DATA SHEET

1 Product and Company Identification

Product Name: **Air Purifier**

Company Name:

VICI® Metronics Inc
26272 Twelve Trees Ln NW
Poulsbo, WA 98370

Emergency Contact Number
1-877-737-1887 or 1-360-697-9199

2 Composition

Ingredient	CAS No.	Wt%	ACGIH TLB-TWA	OSHA PEL-TWA
Silicon oxide (synthetic)	7631-86-9	< 45	10 mg/m^3 Inhalable 3 mg/m^3 Respirable	15 mg/m^3 Total dust 5 mg/m^3 Respirable fraction
Aluminum oxide (non-fibrous)	1344-28-1	< 32	10 mg/m^3	15 mg/m^3 Total dust 5 mg/m^3 Respirable dust
Sodium oxide	1313-59-3	< 15	N/E	N/E
Aluminosilicate	1327-36-2	< 10	10 mg/m^3 Inhalable dust 3 mg/m^3 Respirable dust	15 mg/m^3 Total dust 5 mg/m^3 Respirable dust
Magnesium oxide	1309-48-4	< 3	10 mg/m^3 Fume	15 mg/m^3 Fume, total particulate
Potassium oxide	12136-45-7	< 2	N/E	N/E
Water	7732-18-5	< 2	N/E	N/E
Quartz	14808-60-7	< 1	0.05 mg/m^3 Respirable dust	10 mg/m^3 Total dus 3.3 mg/m^3 Respirable dust

Abbreviations:

N/E - None established
CAS - Chemical Abstracts Service
ACGIH - American Conference of Governmental Industrial Hygienists
TLV - Threshold Limit Value
OSHA - Occupational Safety and Health Administration - USA
TWA - Time Weighted Average
PEL - Permissible Exposure Limit
STEL - Short-Term Exposure Limit

3 Hazard Identification

Emergency Overview

This product is in a sealed container. Exposure can only take place if the integrity of the container is compromised. In case the container is opened, the contained product can cause irritation to the eyes, skin, or upper respiratory system. Quartz may cause cancer.

Potential Health Effects

Primary Routes of Exposure: The product is in a sealed container. As long as the container is not opened, exposure should not take place.

Skin Contact: May cause skin irritation with repeated or prolonged exposure.

Eye Contact: Dust and/or product may cause eye discomfort and/or irritation seen as tearing and reddening.

Ingestion: This product is considered to have a low order of oral toxicity.

Inhalation: Inhalation of product and/or dust may cause irritation of the respiratory system.

Target Organ: Prolonged or repeated exposure may cause lung injury or cancer.

Carcinogenicity Classification

International Agency for Research on Cancer (LARC)

Silicon oxide (synthetic) - Not classifiable as human carcinogen (Group 3)

Crystalline silica inhaled in the form of quartz from occupational sources is carcinogenic to humans. (IARC Group 1).

U.S. National Toxicology Program (NTP)

Not Regulated

Quartz - Known Human Carcinogen

U.S. Occupational Safety and Health Administration (OSHA)

Neither the product nor the component(s) are classified or regulated.

4 First Aid Measures

Skin Contact: Wash affected area with soap and water. If irritation develops, obtain medical attention.

Eye Contact: Flush with water for at least 15 minutes. If irritation occurs, obtain medical attention.

Ingestion: Do not induce vomiting. Obtain medical attention.

Inhalation: Remove affected person to fresh air. If respiratory problems develop, obtain medical attention.

Notes to Physician: Hydrocarbons and other materials that contact the product during normal use can be retained on the product. The retained materials may be hazardous. Identify the retained material and treat accordingly.

5 Fire Fighting Measures

Flash Point: Unused material will not burn.

Extinguishing Media: Use media appropriate for surrounding fire.

Fire and Explosion Hazards: Used material may contain materials of a hazardous nature. The user of this product must identify the hazards of the retained material and inform the fire fighters of these hazards.

6 Accidental Release Measures

Large Spill: Isolate the affected areas. Confine entry into the affected area to those persons properly protected. Special attention should be given to eye, skin, and respiratory protection because recovery of dry product is expected to generate dust. Sweep, shovel or vacuum spilled product into appropriate containers. (Do not use a vacuum if material has contacted a hydrocarbon material.)

Small Spill: Sweep or vacuum spilled product into appropriate container. (Do not use a vacuum if material has contacted a hydrocarbon.) Product should be disposed in accordance with all applicable government regulations. See section 13 of MSDS, Disposal Information.

7 Handling and Storage

The product is in sealed containers. In the event the seal on the container is breached, store the product in tightly closed, properly labeled containers. Store out of direct sunlight. Store in dry area.

8 Exposure Controls and Personal Protection

Respiratory Protection: Product is in a sealed container. As long as the seal on the container is not breached, respiratory protection is not needed. If the container seal is breached and natural ventilation is inadequate, use mechanical ventilation, other engineering controls, or a toxic dust respirator (in USA - NIOSH/MSHA approved) to prevent inhalation of product dust.

Skin Protection: Use gloves to avoid prolonged or repeated skin contact.

Eye Protection: Safety glasses or goggles as necessary to prevent eye contact.

9 Physical and Chemical Properties

These data do not represent technical or sales specifications.

Appearance:	Material is in a sealed container
Odor:	None
pH:	Not applicable
% Volatile:	Not applicable
Pour Point:	Not applicable
Viscosity:	Not applicable
Vapor Density:	Not applicable
Specific Gravity:	Not applicable
Apparent Bulk Density:	0.7 ± 0.1 g/cc
Solubility in Water:	Negligible
Boiling Point:	Not applicable
Freezing Point:	Not applicable
Melting Point:	Not applicable
Vapor Pressure	Not applicable

10 Stability

Stability:	Stable.
Conditions to Avoid:	None known.
Hazardous Decomposition Products:	Hydrocarbons and other materials that contact the product during normal use can be retained on the product. It is reasonable to expect that decomposition products will come from these retained materials of use.
Hazardous Polymerization:	Will not occur.
Incompatible Materials:	Contact with acids may cause leaching of metals.

11 Toxicological Information

Acute Oral Toxicity:	An oral LD_{50} is not available for this product.
Acute Dermal Toxicity:	A dermal LD_{50} is not available for this product.
Acute Inhalation Toxicity:	An inhalation LC_{50} is not available for this product
Irritation:	No data for this product.

Additional Toxicological Information:

Aluminum oxide:	Inhalation of finely divided particles may cause lung damage. Intrapleural TD_{LO}: 90 mg/kg (rat). Implant TD_{LO}: 200 mg/kg (rat). TD_{LO} is Toxic Dose Low.
Silicon oxide:	Exposure can cause lung disease called silicosis, with cough and shortness of breath.

12 Ecological Information

No data is available for the product.

13 Disposal Information

Dispose of the product in accordance with all applicable government regulations. This product (in its fresh unused state) is not listed by generic name or trademark name in the U.S. EPA's Resource Conservation and Recovery Act (RCRA) Hazardous Waste Management Regulations and does not possess any of the four identifying characteristics of hazardous waste (ignitability, corrosivity, reactivity, or toxicity).

14 Transportation Information

U.S. Department of Transportation Shipping Name:	Not regulated.
International Maritime Organization (IMO):	Not regulated.

United States

TSCA *(Toxic Substances Control Act):*

All the ingredients of this mixture are listed on the TSCA Chemical Substance Inventory.

CERCLA *(Comprehensive Environmental Response, Compensation, and Liability Act) Reportable Quantity:*

The following component(s) of this product is/are subject to release reporting under 40 CFR 302 when release exceeds the Reportable Quantity (RQ):

—None—

SARA *(Superfund Amendments and Reauthorization Act of 1986) Title III:*

Section 302 (Extremely Hazardous Substances):

The following component(s) of this product is/are subject to the emergency planning provisions of 40 CFR 355 when there are amounts equal or greater than the Threshold Planning Quantity (TPQ):

—None—

Section 313 (Toxic Chemicals):

The following component(s) have been specified as Toxic Chemicals under SARA Section 313 and may be subject to the Toxic Release Inventory (TRI) reporting requirements under 40 CFR 372:

—None—

European Union (EU)

European Inventory of Existing Commercial Chemical Substances:

All components of this preparation are included in EINECS/ELINCS.

Silicon oxide (synthetic)	2315454
Aluminum oxide (non-fibrous)	2156916
Sodium oxide	2152089
Aluminosilicate	2154751
Magnesium oxide	2151719
Potassium oxide	2352276
Water	2317912
Quartz	2388784

Council of European Communities Directive on Classification, Packaging and Labelling of Dangerous Substances/Preparation (67/548/EEC & 88/379/EEC):

No Dangerous Goods Label Required.

Canada

Canadian Hazard Products Act:

This product is not classified as a controlled product under regulations pursuant to the federal Hazardous Product Act (*e.g.* WHMIS).

Revision 2

Summary of Changes:	Sections 2, 15
I.D./Form:	MS0011
Supersedes:	March 1996

Revision 3

Summary of Changes:	Section 1
I.D./Form:	MS0011
Supersedes:	December 2005

Revision 4

Summary of Changes:	Sections 1, 15 (EU)
I.D./Form:	MS0011
Supersedes:	November 2008

HMIS™ - Hazardous Materials Identification System

HMIS™ Ratings	
HEALTH	1*
FLAMMABILITY	0
REACTIVITY	0

0 - minimal hazard
1 - slight hazard
2 - moderate hazard
3 - serious hazard
4 - severe hazard
* - may cause cancer

Carbon Dioxide Gas Purifier for High Purity Applications

- Outperforms carbon-based hydrocarbon traps
- Larger number and variety of contaminants removed
- Optimized for the high flows of process equipment

Description

VICI Metronics gas purifier modules are designed to be placed in-line with the CO_2 gas supply. Patented adsorptive materials capture and retain a broad spectrum of hydrocarbons, halocarbons, and other contaminants that can be present in your CO_2 gas delivery system. The contaminants are retained for the operating life of the purifier.

The gas purifier modules offer dramatic reductions in most contaminant levels and adsorb a larger number and variety of contaminants than other commonly used adsorptive materials. The performance is optimized by incorporating a multiple bed format so that each successive bed functions at a lower contaminant concentration. The result is a series of contaminant concentration gradients across the length of the CO_2 purifier module.

The CO_2 gas purifier has been optimized for the high flow CO_2 gas supply used on process equipment, and has been shown to outperform the carbon-based hydrocarbon traps previously used for this application. A module is typically good for four tanks of CO_2.

Two very high capacity hydrocarbon and moisture sorbents at the inlet for effective contaminant removal

Unique proprietary broad spectrum sorbent material for multiple contaminant removal

Two oxygen scavenging materials for both high capacity and high efficiency O_2 removal

Multiple bed format to allow several step reduction in contaminants

Removal of H_2O, O_2, halocarbons, hydrocarbons, CO, H_2, and sulfur containing compounds with a single purifier

Very high efficiency sorbents at the outlet for trace contaminant removal

MATERIAL SAFETY DATA SHEET

1 Product and Company Identification

Product Name: **Helium, Hydrogen, and Nitrogen Purifiers**

Company Name:

VICI® Metronics Inc
26272 Twelve Trees Ln NW
Poulsbo, WA 98370

Emergency Contact Number
1-877-737-1887 or 1-360-697-9199

2 Composition

Ingredient	CAS No.	Wt%	ACGIH TLB-TWA	OSHA PEL-TWA
Silicon oxide (synthetic)	7631-86-9	< 60	10 mg/m^3 Inhalable 3 mg/m^3 Respirable	15 mg/m^3 Total dust 5 mg/m^3 Respirable fraction
Aluminum oxide (non-fibrous)	1344-28-1	< 40	10 mg/m^3	15 mg/m^3 Total dust 5 mg/m^3 Respirable dust
Copper	7440-50-8	< 30	1 mg/m^3 Dust & mist as Cu	1 mg/m^3 Dust & mist as Cu
Zinc Oxide	1314-13-2	< 15		15 mg/m^3 Total dust 5 mg/m^3 Respirable dust as Al
Sodium oxide	1313-59-3	< 5	N/E	N/E

Abbreviations:

N/E - None established
CAS - Chemical Abstracts Service
ACGIH - American Conference of Governmental Industrial Hygienists
TLV - Threshold Limit Value
OSHA - Occupational Safety and Health Administration - USA
TWA - Time Weighted Average
PEL - Permissible Exposure Limit
STEL - Short-Term Exposure Limit

3 Hazard Identification

Emergency Overview

This product is in a sealed container. Exposure can only take place if the integrity of the container is compromised. In case the container is opened, the contained product can cause irritation to the eyes, skin, or upper respiratory system. Cobalt and cobalt compounds are classified as possible human carcinogens. Quartz may cause cancer.

Potential Health Effects

Primary Routes of Exposure: The product is in a sealed container. As long as the container is not opened, exposure should not take place.

Skin Contact: Prolonged or repeated exposures may cause dermatitis or an allergic skin reaction.

Eye Contact: Dust and/or product may cause eye discomfort and/or irritation seen as tearing and reddening.

Ingestion: This product is slightly toxic by ingestion.

Inhalation: Inhalation of product and/or dust may cause irritation of the respiratory system.

Target Organ: Prolonged or repeated exposure may cause lung injury or cancer.

Carcinogenicity Classification

International Agency for Research on Cancer (LARC)
Silicon oxide (synthetic) - Not classifiable as human carcinogen (Group 3)

U.S. National Toxicology Program (NTP)
Not Regulated

U.S. Occupational Safety and Health Administration (OSHA)
Not Regulated

4 First Aid Measures

Skin Contact: Wash affected area with soap and water. If irritation develops, obtain medical attention.

Eye Contact: Flush with water for at least 15 minutes. If irritation occurs, obtain medical attention.

Ingestion: Do not induce vomiting. Obtain medical attention.

Inhalation: Remove affected person to fresh air. If respiratory problems develop, obtain medical attention.

Notes to Physician: Hydrocarbons and other materials that contact the product during normal use can be retained on the product. The retained materials may be hazardous. Identify the retained material and treat accordingly.

5 Fire Fighting Measures

Flash Point: Unused material will not burn.

Extinguishing Media: Use media appropriate for surrounding fire.

Fire and Explosion Hazards: Used material may contain materials of a hazardous nature. The user of this product must identify the hazards of the retained material and inform the fire fighters of these hazards.

6 Accidental Release Measures

Large Spill: Isolate the affected areas. Confine entry into the affected area to those persons properly protected. Special attention should be given to eye, skin, and respiratory protection because recovery of dry product is expected to generate dust. Sweep, shovel or vacuum spilled product into appropriate containers. (Do not use a vacuum if material has contacted a hydrocarbon material.)

Small Spill: Sweep or vacuum spilled product into appropriate container. (Do not use a vacuum if material has contacted a hydrocarbon.) Product should be disposed in accordance with all applicable government regulations. See section 13 of MSDS, Disposal Information.

7 Handling and Storage

The product is in sealed containers. In the event the seal on the container is breached, store the product in tightly closed, properly labeled containers. Store out of direct sunlight. Store in dry area.

8 Exposure Controls and Personal Protection

Respiratory Protection: Product is in a sealed container. As long as the seal on the container is not breached, respiratory protection is not needed. If the container seal is breached and natural ventilation is inadequate, use mechanical ventilation, other engineering controls, or a toxic dust respirator (in USA - NIOSH/MSHA approved) to prevent inhalation of product dust.

Skin Protection: Use gloves to avoid prolonged or repeated skin contact.

Eye Protection: Safety glasses or goggles as necessary to prevent eye contact.

9 Physical and Chemical Properties

These data do not represent technical or sales specifications.

Appearance:	Material is in a sealed container
Odor:	None
pH:	Not applicable
% Volatile:	Not applicable
Pour Point:	Not applicable
Viscosity:	Not applicable
Vapor Density:	Not applicable
Specific Gravity:	Not applicable
Apparent Bulk Density:	0.7 ± 0.2 g/cc
Solubility in Water:	Negligible
Boiling Point:	Not applicable
Freezing Point:	Not applicable
Melting Point:	Not applicable
Vapor Pressure	Not applicable

10 Stability

Stability:	Stable.
Conditions to Avoid:	None known.
Hazardous Decomposition Products:	Hydrocarbons and other materials that contact the product during normal use can be retained on the product. It is reasonable to expect that decomposition products will come from these retained materials of use.
Hazardous Polymerization:	Will not occur.
Incompatible Materials:	Contact with acids may cause leaching of metals.

11 Toxicological Information

Acute Oral Toxicity:	An oral LD_{50} is not available for this product.
Acute Dermal Toxicity:	A dermal LD_{50} is not available for this product.
Acute Inhalation Toxicity:	An inhalation LC_{50} is not available for this product
Irritation:	No data for this product.

Additional Toxicological Information:

Aluminum oxide:	Inhalation of finely divided particles may cause lung damage. Intrapleural TD_{LO}: 90 mg/kg (rat). Implant TD_{LO}: 200 mg/kg (rat). TD_{LO} is Toxic Dose Low.
Silicon oxide:	Exposure can cause lung disease called silicosis, with cough and shortness of breath.

12 Ecological Information

No data is available for the product.

13 Disposal Information

Dispose of the product in accordance with all applicable government regulations. This product (in its fresh unused state) is not listed by generic name or trademark name in the U.S. EPA's Resource Conservation and Recovery Act (RCRA) Hazardous Waste Management Regulations and does not possess any of the four identifying characteristics of hazardous waste (ignitability, corrosivity, reactivity, or toxicity).

14 Transportation Information

U.S. Department of Transportation Shipping Name:	Not regulated.
International Maritime Organization (IMO):	Not regulated.

United States

TSCA *(Toxic Substances Control Act):*

All the ingredients of this mixture are listed on the TSCA Chemical Substance Inventory.

CERCLA *(Comprehensive Environmental Response, Compensation, and Liability Act) Reportable Quantity:*

The following component(s) of this product is/are subject to release reporting under 40 CFR 302 when release exceeds the Reportable Quantity (RQ):

—None—

SARA *(Superfund Amendments and Reauthorization Act of 1986) Title III:*

Section 302 (Extremely Hazardous Substances):

The following component(s) of this product is/are subject to the emergency planning provisions of 40 CFR 355 when there are amounts equal or greater than the Threshold Planning Quantity (TPQ):

—None—

Section 313 (Toxic Chemicals):

The following component(s) have been specified as Toxic Chemicals under SARA Section 313 and may be subject to the Toxic Release Inventory (TRI) reporting requirements under 40 CFR 372:

Copper compounds

State Community Right-to-Know Legislation

The following component(s) of this product are regulated under California's Proposition 65:

—None—

European Union (EU)

European Inventory of Existing Commercial Chemical Substances:

All components of this preparation are included in EINECS/ELINCS.

Aluminum oxide (non-fibrous)	2156916
Silicon oxide (synthetic)	2315454
Copper oxide	2152691
Zinc oxide	2152225
Sodium oxide	2152089

Council of European Communities Directive on Classification, Packaging and Labelling of Dangerous Substances/Preparation (67/548/EEC & 88/379/EEC):

R43	May cause sensitization by skin contact.
S24	Avoid contact with skin.
S36/37/39	Wear suitable protective clothing, gloves, and eye/face protection.
Xi	Irritant

Canada

Canadian Hazard Products Act:

This product is not classified as a controlled product under regulations pursuant to the federal Hazardous Product Act (*e.g.* WHMIS).

Revision 3

Summary of Changes:	Sections 2, 3, 13, 15 (U.S.)
I.D./Form:	MS0004
Supersedes:	October 2001

Revision 4

Summary of Changes:	Section 2
I.D./Form:	MS0004
Supersedes:	April 2006

Revision 5

Summary of Changes:	Section 1
I.D./Form:	MS0004
Supersedes:	July 2007

Revision 6

Summary of Changes:	Section 1, 15 (EU)
I.D./Form:	MS0004
Supersedes:	November 2008

HMIS™ - Hazardous Materials Identification System

HMIS™ Ratings	
HEALTH	1
FLAMMABILITY	0
REACTIVITY	0

0 - minimal hazard
1 - slight hazard
2 - moderate hazard
3 - serious hazard
4 - severe hazard
* - may cause cancer

MATERIAL SAFETY DATA SHEET

1 Product and Company Identification

Product Name: **Methane Purifier**

Company Name:

VICI® Metronics Inc
26272 Twelve Trees Ln NW
Poulsbo, WA 98370

Emergency Contact Number
1-877-737-1887 or 1-360-697-9199

2 Composition

Ingredient	CAS No.	Wt%	ACGIH TLB-TWA	OSHA PEL-TWA
Silicon oxide (synthetic)	7631-86-9	< 60	10 mg/m^3 Inhalable 3 mg/m^3 Respirable	15 mg/m^3 Total dust 5 mg/m^3 Respirable fraction
Aluminum oxide (non-fibrous)	1344-28-1	< 40	10 mg/m^3	15 mg/m^3 Total dust 5 mg/m^3 Respirable dust
Copper	7440-50-8	< 30	1 mg/m^3 Dust & mist as Cu	1 mg/m^3 Dust & mist as Cu
Zinc Oxide	1314-13-2	< 15		15 mg/m^3 Total dust 5 mg/m^3 Respirable dust as Al
Sodium oxide	1313-59-3	< 5	N/E	N/E

Abbreviations:

N/E - None established
CAS - Chemical Abstracts Service
ACGIH - American Conference of Governmental Industrial Hygienists
TLV - Threshold Limit Value
OSHA - Occupational Safety and Health Administration - USA
TWA - Time Weighted Average
PEL - Permissible Exposure Limit
STEL - Short-Term Exposure Limit

3 Hazard Identification

Emergency Overview

This product is in a sealed container. Exposure can only take place if the integrity of the container is compromised. In case the container is opened, the contained product can cause irritation to the eyes, skin, or upper respiratory system. Cobalt and cobalt compounds are classified as possible human carcinogens. Quartz may cause cancer.

Potential Health Effects

Primary Routes of Exposure: The product is in a sealed container. As long as the container is not opened, exposure should not take place.

Skin Contact: Prolonged or repeated exposures may cause dermatitis or an allergic skin reaction.

Eye Contact: Dust and/or product may cause eye discomfort and/or irritation seen as tearing and reddening.

Ingestion: This product is slightly toxic by ingestion.

Inhalation: Inhalation of product and/or dust may cause irritation of the respiratory system.

Target Organ: Prolonged or repeated exposure may cause lung injury or cancer.

Carcinogenicity Classification

International Agency for Research on Cancer (LARC)
Silicon oxide (synthetic) - Not classifiable as human carcinogen (Group 3)

U.S. National Toxicology Program (NTP)
Not Regulated

U.S. Occupational Safety and Health Administration (OSHA)
Not Regulated

4 First Aid Measures

Skin Contact: Wash affected area with soap and water. If irritation develops, obtain medical attention.

Eye Contact: Flush with water for at least 15 minutes. If irritation occurs, obtain medical attention.

Ingestion: Do not induce vomiting. Obtain medical attention.

Inhalation: Remove affected person to fresh air. If respiratory problems develop, obtain medical attention.

Notes to Physician: Hydrocarbons and other materials that contact the product during normal use can be retained on the product. The retained materials may be hazardous. Identify the retained material and treat accordingly.

5 Fire Fighting Measures

Flash Point: Unused material will not burn.

Extinguishing Media: Use media appropriate for surrounding fire.

Fire and Explosion Hazards: Used material may contain materials of a hazardous nature. The user of this product must identify the hazards of the retained material and inform the fire fighters of these hazards.

6 Accidental Release Measures

Large Spill: Isolate the affected areas. Confine entry into the affected area to those persons properly protected. Special attention should be given to eye, skin, and respiratory protection because recovery of dry product is expected to generate dust. Sweep, shovel or vacuum spilled product into appropriate containers. (Do not use a vacuum if material has contacted a hydrocarbon material.)

Small Spill: Sweep or vacuum spilled product into appropriate container. (Do not use a vacuum if material has contacted a hydrocarbon.) Product should be disposed in accordance with all applicable government regulations. See section 13 of MSDS, Disposal Information.

7 Handling and Storage

The product is in sealed containers. In the event the seal on the container is breached, store the product in tightly closed, properly labeled containers. Store out of direct sunlight. Store in dry area.

8 Exposure Controls and Personal Protection

Respiratory Protection: Product is in a sealed container. As long as the seal on the container is not breached, respiratory protection is not needed. If the container seal is breached and natural ventilation is inadequate, use mechanical ventilation, other engineering controls, or a toxic dust respirator (in USA - NIOSH/MSHA approved) to prevent inhalation of product dust.

Skin Protection: Use gloves to avoid prolonged or repeated skin contact.

Eye Protection: Safety glasses or goggles as necessary to prevent eye contact.

9 Physical and Chemical Properties

These data do not represent technical or sales specifications.

Appearance:	Material is in a sealed container
Odor:	None
pH:	Not applicable
% Volatile:	Not applicable
Pour Point:	Not applicable
Viscosity:	Not applicable
Vapor Density:	Not applicable
Specific Gravity:	Not applicable
Apparent Bulk Density:	0.7 ± 0.2 g/cc
Solubility in Water:	Negligible
Boiling Point:	Not applicable
Freezing Point:	Not applicable
Melting Point:	Not applicable
Vapor Pressure	Not applicable

10 Stability

Stability:	Stable.
Conditions to Avoid:	None known.
Hazardous Decomposition Products:	Hydrocarbons and other materials that contact the product during normal use can be retained on the product. It is reasonable to expect that decomposition products will come from these retained materials of use.
Hazardous Polymerization:	Will not occur.
Incompatible Materials:	Contact with acids may cause leaching of metals.

11 Toxicological Information

Acute Oral Toxicity:	An oral LD_{50} is not available for this product.
Acute Dermal Toxicity:	A dermal LD_{50} is not available for this product.
Acute Inhalation Toxicity:	An inhalation LC_{50} is not available for this product
Irritation:	No data for this product.

Additional Toxicological Information:

Aluminum oxide:	Inhalation of finely divided particles may cause lung damage. Intrapleural TD_{LO}: 90 mg/kg (rat). Implant TD_{LO}: 200 mg/kg (rat). TD_{LO} is Toxic Dose Low.
Silicon oxide:	Exposure can cause lung disease called silicosis, with cough and shortness of breath.

12 Ecological Information

No data is available for the product.

13 Disposal Information

Dispose of the product in accordance with all applicable government regulations. This product (in its fresh unused state) is not listed by generic name or trademark name in the U.S. EPA's Resource Conservation and Recovery Act (RCRA) Hazardous Waste Management Regulations and does not possess any of the four identifying characteristics of hazardous waste (ignitability, corrosivity, reactivity, or toxicity).

14 Transportation Information

U.S. Department of Transportation Shipping Name:	Not regulated.
International Maritime Organization (IMO):	Not regulated.

United States

TSCA *(Toxic Substances Control Act):*

All the ingredients of this mixture are listed on the TSCA Chemical Substance Inventory.

CERCLA *(Comprehensive Environmental Response, Compensation, and Liability Act) Reportable Quantity:*

The following component(s) of this product is/are subject to release reporting under 40 CFR 302 when release exceeds the Reportable Quantity (RQ):

—None—

SARA *(Superfund Amendments and Reauthorization Act of 1986) Title III:*

Section 302 (Extremely Hazardous Substances):

The following component(s) of this product is/are subject to the emergency planning provisions of 40 CFR 355 when there are amounts equal or greater than the Threshold Planning Quantity (TPQ):

—None—

Section 313 (Toxic Chemicals):

The following component(s) have been specified as Toxic Chemicals under SARA Section 313 and may be subject to the Toxic Release Inventory (TRI) reporting requirements under 40 CFR 372:

Copper compounds

State Community Right-to-Know Legislation

The following component(s) of this product are regulated under California's Proposition 65:

—None—

European Union (EU)

European Inventory of Existing Commercial Chemical Substances:

All components of this preparation are included in EINECS/ELINCS.

Aluminum oxide (non-fibrous)	2156916
Silicon oxide (synthetic)	2315454
Copper oxide	2152691
Zinc oxide	2152225
Sodium oxide	2152089

Council of European Communities Directive on Classification, Packaging and Labelling of Dangerous Substances/Preparation (67/548/EEC & 88/379/EEC):

R43	May cause sensitization by skin contact.
S24	Avoid contact with skin.
S36/37/39	Wear suitable protective clothing, gloves, and eye/face protection.
Xi	Irritant

Canada

Canadian Hazard Products Act:

This product is not classified as a controlled product under regulations pursuant to the federal Hazardous Product Act (*e.g.* WHMIS).

HMIS™ - Hazardous Materials Identification System

HMIS™ Ratings	
HEALTH	1
FLAMMABILITY	0
REACTIVITY	0

0 - minimal hazard
1 - slight hazard
2 - moderate hazard
3 - serious hazard
4 - severe hazard
* - may cause cancer

GAS PURIFICATION

Fittings and Gas Purity

Basically, the point to remember is "the fewer the better". Every connection in your gas delivery system has the potential for leaks; the more fittings you have, the greater the potential. In the illustration below, several gas purification options are depicted:

- The Metronics gas specific purifier minimizes the number of fittings. Total fittings: 2
- The "Manifold System" has two compression fittings for the system and one organic O-ring seal for each cartridge. Total fittings: at least 5
- A typical "Contaminant Trap" configuration has several components. Before the gas supply even enters the GC there are at least 4 modules. Total fittings: at least 8

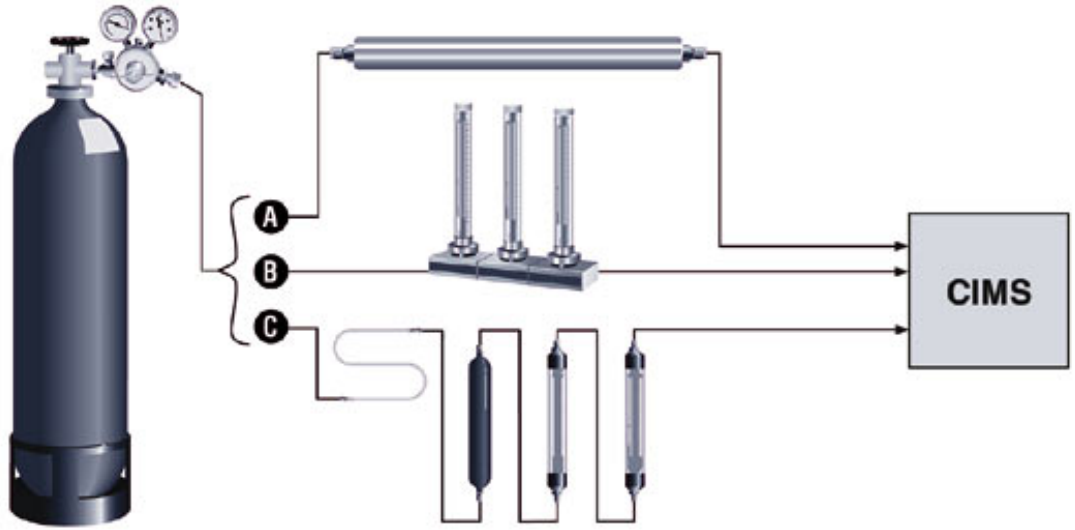

MORE INFORMATION

- Contact Metronics to find out more about VICI Metronics gas purifiers. North American customers can call toll-free (877) 737-1887.

Gas Purifier for CI/MS Applications

- 1/8" compression fittings
- 1000 psig pressure rating
- Compatible with most CI gases
- Welded stainless steel body

Description

The use of Chemical Ionization Mass Spectroscopy has increased in recent years, with instrumentation to perform this sensitive analytical technique now availalbe commercially. In response to this growth, VICI Metronics has developed a gas purifier designed specifically for the unique demands of chemical ionization.

Several types of contaminants are detrimental to CI performance – notably moisture, heavy hydrocarbons, halocarbons, and oxygen. A Metronics CI purifier module placed in line with the gas delivery system removes these contaminants, reducing levels from many parts per million to levels that are below the lower limit of analytical detection, and retains them for the operating life of the purifier. (Recommended replacement is after three bottles of gas, or if detector baseline drift and noise become apparent.)

Successive Beds for Peak Performance

A very high capacity has been engineered into the gas purifier by using several different materials for gross contaminant removal and additional materials for the removal of trace amounts of the contaminants. Three separate adsorption chemistries are incorporated into the operating design of the gas purifier to insure the optimal capacity and efficiency. This successive bad format insures high capacity as well as a very high efficiency for the removal of contaminants that can be present in even high purity methane.

Our successive bed format achieves the highest purity gas commercially available

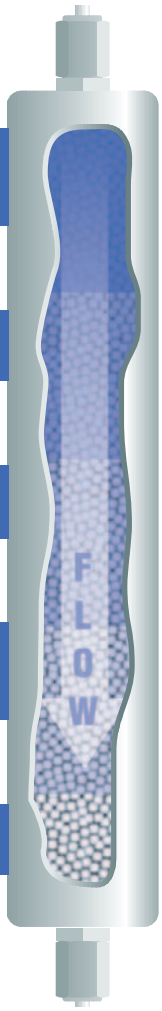

Two very high capacity hydrocarbon and moisture sorbents at the inlet for effective contaminant removal

Unique proprietary broad spectrum sorbent material for multiple contaminant removal

Multiple bed format to allow several step reduction in contaminants

Removal of H_2O, O_2, halocarbons, hydrocarbons, CO, CO_2, H_2, and sulfur containing compounds with a single purifier

Very high efficiency sorbents at the outlet for trace contaminant removal

Fittings: the Fewer the Better

Every connection in your gas delivery system has the potential for leaks; the more fittings you have, the greater the potential. In the illustration below, several gas purification options are depicted:

A The VICI Metronics nitrogen purifier minimizes the number of fittings. Total: **2 fittings**

B The "Manifold System" has two compression fittings for the system and one organic O-ring seal for each cartridge. Total: **At least 5 fittings**

C A typical "Contaminant Trap" configuration has several components. Before the gas supply even enters the instrument, there are at least 4 modules. Total: **At least 8 fittings**

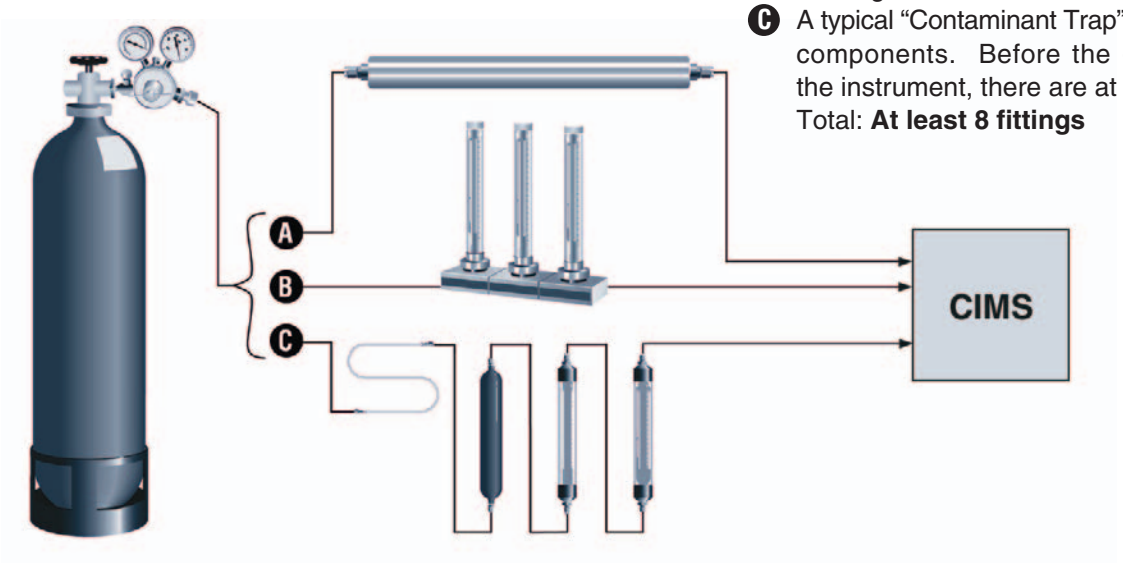

Specifications

Length ..... 30.5 cm (12")
Diameter..... 3.8 cm (1.5")
Maximum inlet pressure ..... 6895 kPa (1000 psi)
Maximum recommended flow ..... 500 ml/min
Pressure drop, 862 kPa (125 psi) inlet,
at a flow of 0 to 500 ml/min ..... <0.20 psi
End fittings ..... 1/8" compression
Shipping weight .....800 g (1.76 lb)

Selection Guide and Ordering Information

Product Description	Product no.	Fitting	PPB at outlet, based on 50 PPM nominal inlet concentration level		
			O_2	H_2O	Sulfur compounds
CI purifier	P-500-1	1/8"	<1	<1	<1

Nitrogen Gas Purifier for LC/MS Applications

- Designed to purify nitrogen gas produced from liquid nitrogen
- Decrease baseline noise and increase LC/MS sensitivity
- Reduce background noise and ghost peaks

Description

VICI Metronics nitrogen purifiers are optimized for the high flow nitrogen gas supply used on LC/MS instruments. Several types of contaminants are detrimental to LC/MS performance – notably moisture, hydrocarbons, halocarbons, and oxygen. A Metronics nitrogen purifier module placed in line with the nitrogen gas delivery system removes these contaminants, retaining them for the operating life of the purifier.

The purifier reduces most contaminant levels from many parts per million to levels that are below the lower limit of analytical detection, and absorbs a larger number and a greater variety of contaminants than other commonly used adsorptive materials. In particular, the Metronics nitrogen purifier has been shown to out perform the carbon-based hydrocarbon traps previously used for this application.

Caution:
This purifier is designed to be used with nitrogen gas produced from liquid nitrogen, or with nitrogen gas containing less than 500 ppm of oxygen. If this product is used on a stream with a high oxygen content, it may get hot enough to cause injury. Use our Purifier for Nitrogen Generators (P-350-1 and P-350-2) to purify high oxygen content nitrogen.

Our successive bed format achieves the highest purity gas commercially available

- Two very high capacity hydrocarbon and moisture sorbents at the inlet for effective contaminant removal
- Unique proprietary broad spectrum sorbent material for multiple contaminant removal
- Two oxygen scavenging materials for both high capacity and high efficiency O_2 removal
- Multiple bed format to allow several step reduction in contaminants
- Removal of H_2O, O_2, halocarbons, hydrocarbons, CO, CO_2, H_2, and sulfur containing compounds with a single purifier
- Very high efficiency sorbents at the outlet for trace contaminant removal

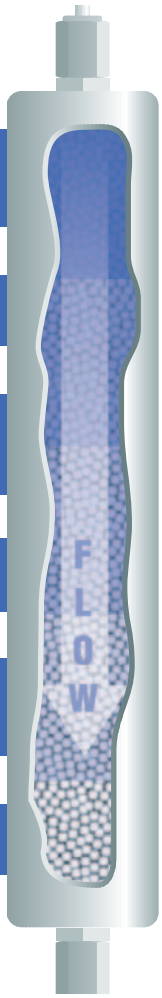

Fittings: the Fewer the Better

Every connection in your gas delivery system has the potential for leaks; the more fittings you have, the greater the potential. In the illustration below, several gas purification options are depicted:

A The VICI Metronics nitrogen purifier minimizes the number of fittings. Total: **2 fittings**

B The "Manifold System" has two compression fittings for the system and one organic O-ring seal for each cartridge. Total: **At least 5 fittings**

C A typical "Contaminant Trap" configuration has several components. Before the gas supply even enters the instrument, there are at least 4 modules. Total: **At least 8 fittings**

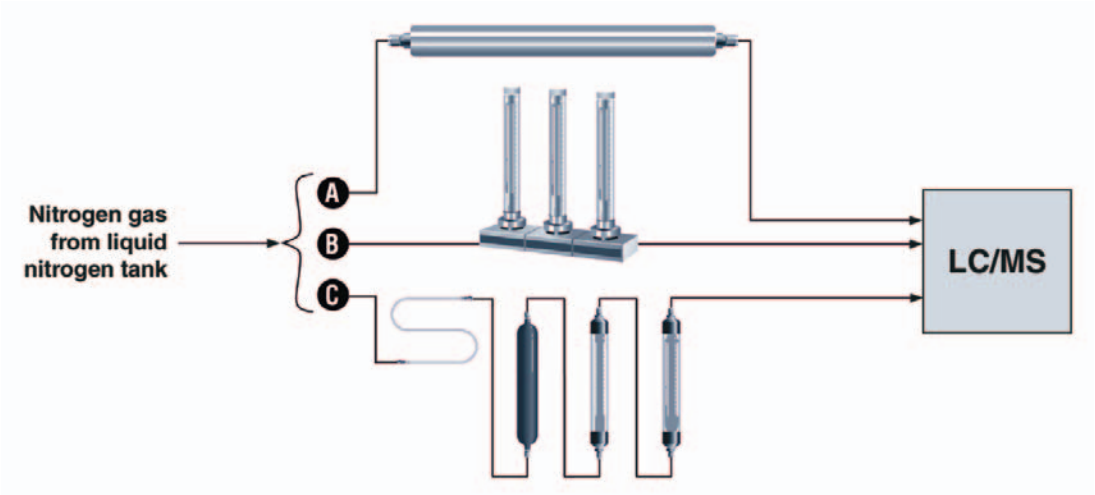

Specifications

Length ..... 53.3 cm (21")
Diameter..... 3.8 cm (1.5")
Maximum inlet pressure ..... 6895 kPa (1000 psi)
Maximum recommended flow ..... 12 L/min
Pressure drop, 862 kPa (125 psi) inlet, at a flow of 0 to 500 ml/min ..... <0.20 psi
Compression end fittings ..... 1/8" or 1/4"
Shipping weight .....1300 g (3.04 lb)

Ordering Information

Product Description	Fitting	Product no.
Nitrogen purifier for LC/MS applications	1/8"	P-310-1
	1/4"	P-310-2

MATERIAL SAFETY DATA SHEET

1 Product and Company Identification

Product Name: **Nitrogen Purifier for LC/MS**

Company Name:

VICI® Metronics Inc
26272 Twelve Trees Ln NW
Poulsbo, WA 98370

Emergency Contact Number
1-877-737-1887 or 1-360-697-9199

2 Composition

Ingredient	CAS No.	Wt%	ACGIH TLB-TWA	OSHA PEL-TWA
Silicon oxide (synthetic)	7631-86-9	< 45	10 mg/m^3 Inhalable 3 mg/m^3 Respirable	15 mg/m^3 Total dust 5 mg/m^3 Respirable fraction
Aluminum oxide (non-fibrous)	1344-28-1	< 32	10 mg/m^3	15 mg/m^3 Total dust 5 mg/m^3 Respirable dust
Sodium oxide	1313-59-3	< 15	N/E	N/E
Aluminosilicate	1327-36-2	< 10	10 mg/m^3 Inhalable dust 3 mg/m^3 Respirable dust	15 mg/m^3 Total dust 5 mg/m^3 Respirable dust
Magnesium oxide	1309-48-4	< 3	10 mg/m^3 Fume	15 mg/m^3 Fume, total particulate
Potassium oxide	12136-45-7	< 2	N/E	N/E
Water	7732-18-5	< 2	N/E	N/E
Quartz	14808-60-7	< 1	0.05 mg/m^3 Respirable dust	10 mg/m^3 Total dus 3.3 mg/m^3 Respirable dust

Abbreviations:

N/E - None established
CAS - Chemical Abstracts Service
ACGIH - American Conference of Governmental Industrial Hygienists
TLV - Threshold Limit Value
OSHA - Occupational Safety and Health Administration - USA
TWA - Time Weighted Average
PEL - Permissible Exposure Limit
STEL - Short-Term Exposure Limit

3 Hazard Identification

Emergency Overview

This product is in a sealed container. Exposure can only take place if the integrity of the container is compromised. In case the container is opened, the contained product can cause irritation to the eyes, skin, or upper respiratory system. Quartz may cause cancer.

Potential Health Effects

Primary Routes of Exposure: The product is in a sealed container. As long as the container is not opened, exposure should not take place.

Skin Contact: May cause skin irritation with repeated or prolonged exposure.

Eye Contact: Dust and/or product may cause eye discomfort and/or irritation seen as tearing and reddening.

Ingestion: This product is considered to have a low order of oral toxicity.

Inhalation: Inhalation of product and/or dust may cause irritation of the respiratory system.

Target Organ: Prolonged or repeated exposure may cause lung injury or cancer.

Carcinogenicity Classification

International Agency for Research on Cancer (LARC)

Silicon oxide (synthetic) - Not classifiable as human carcinogen (Group 3)

Crystalline silica inhaled in the form of quartz from occupational sources is carcinogenic to humans. (IARC Group 1).

U.S. National Toxicology Program (NTP)

Not Regulated

Quartz - Known Human Carcinogen

U.S. Occupational Safety and Health Administration (OSHA)

Neither the product nor the component(s) are classified or regulated.

4 First Aid Measures

Skin Contact: Wash affected area with soap and water. If irritation develops, obtain medical attention.

Eye Contact: Flush with water for at least 15 minutes. If irritation occurs, obtain medical attention.

Ingestion: Do not induce vomiting. Obtain medical attention.

Inhalation: Remove affected person to fresh air. If respiratory problems develop, obtain medical attention.

Notes to Physician: Hydrocarbons and other materials that contact the product during normal use can be retained on the product. The retained materials may be hazardous. Identify the retained material and treat accordingly.

5 Fire Fighting Measures

Flash Point: Unused material will not burn.

Extinguishing Media: Use media appropriate for surrounding fire.

Fire and Explosion Hazards: Used material may contain materials of a hazardous nature. The user of this product must identify the hazards of the retained material and inform the fire fighters of these hazards.

6 Accidental Release Measures

Large Spill: Isolate the affected areas. Confine entry into the affected area to those persons properly protected. Special attention should be given to eye, skin, and respiratory protection because recovery of dry product is expected to generate dust. Sweep, shovel or vacuum spilled product into appropriate containers. (Do not use a vacuum if material has contacted a hydrocarbon material.)

Small Spill: Sweep or vacuum spilled product into appropriate container. (Do not use a vacuum if material has contacted a hydrocarbon.) Product should be disposed in accordance with all applicable government regulations. See section 13 of MSDS, Disposal Information.

7 Handling and Storage

The product is in sealed containers. In the event the seal on the container is breached, store the product in tightly closed, properly labeled containers. Store out of direct sunlight. Store in dry area.

8 Exposure Controls and Personal Protection

Respiratory Protection: Product is in a sealed container. As long as the seal on the container is not breached, respiratory protection is not needed. If the container seal is breached and natural ventilation is inadequate, use mechanical ventilation, other engineering controls, or a toxic dust respirator (in USA - NIOSH/MSHA approved) to prevent inhalation of product dust.

Skin Protection: Use gloves to avoid prolonged or repeated skin contact.

Eye Protection: Safety glasses or goggles as necessary to prevent eye contact.

9 Physical and Chemical Properties

These data do not represent technical or sales specifications.

Appearance:	Material is in a sealed container
Odor:	None
pH:	Not applicable
% Volatile:	Not applicable
Pour Point:	Not applicable
Viscosity:	Not applicable
Vapor Density:	Not applicable
Specific Gravity:	Not applicable
Apparent Bulk Density:	0.7 ± 0.1 g/cc
Solubility in Water:	Negligible
Boiling Point:	Not applicable
Freezing Point:	Not applicable
Melting Point:	Not applicable
Vapor Pressure	Not applicable

10 Stability

Stability:	Stable.
Conditions to Avoid:	None known.
Hazardous Decomposition Products:	Hydrocarbons and other materials that contact the product during normal use can be retained on the product. It is reasonable to expect that decomposition products will come from these retained materials of use.
Hazardous Polymerization:	Will not occur.
Incompatible Materials:	Contact with acids may cause leaching of metals.

11 Toxicological Information

Acute Oral Toxicity:	An oral LD_{50} is not available for this product.
Acute Dermal Toxicity:	A dermal LD_{50} is not available for this product.
Acute Inhalation Toxicity:	An inhalation LC_{50} is not available for this product
Irritation:	No data for this product.

Additional Toxicological Information:

Aluminum oxide:	Inhalation of finely divided particles may cause lung damage. Intrapleural TD_{LO}: 90 mg/kg (rat). Implant TD_{LO}: 200 mg/kg (rat). TD_{LO} is Toxic Dose Low.
Silicon oxide:	Exposure can cause lung disease called silicosis, with cough and shortness of breath.

12 Ecological Information

No data is available for the product.

13 Disposal Information

Dispose of the product in accordance with all applicable government regulations. This product (in its fresh unused state) is not listed by generic name or trademark name in the U.S. EPA's Resource Conservation and Recovery Act (RCRA) Hazardous Waste Management Regulations and does not possess any of the four identifying characteristics of hazardous waste (ignitability, corrosivity, reactivity, or toxicity).

14 Transportation Information

U.S. Department of Transportation Shipping Name:	Not regulated.
International Maritime Organization (IMO):	Not regulated.

United States

TSCA *(Toxic Substances Control Act):*

All the ingredients of this mixture are listed on the TSCA Chemical Substance Inventory.

CERCLA *(Comprehensive Environmental Response, Compensation, and Liability Act) Reportable Quantity:*

The following component(s) of this product is/are subject to release reporting under 40 CFR 302 when release exceeds the Reportable Quantity (RQ):

—None—

SARA *(Superfund Amendments and Reauthorization Act of 1986) Title III:*

Section 302 (Extremely Hazardous Substances):

The following component(s) of this product is/are subject to the emergency planning provisions of 40 CFR 355 when there are amounts equal or greater than the Threshold Planning Quantity (TPQ):

—None—

Section 313 (Toxic Chemicals):

The following component(s) have been specified as Toxic Chemicals under SARA Section 313 and may be subject to the Toxic Release Inventory (TRI) reporting requirements under 40 CFR 372:

—None—

European Union (EU)

European Inventory of Existing Commercial Chemical Substances:

All components of this preparation are included in EINECS/ELINCS.

Silicon oxide (synthetic)	2315454
Aluminum oxide (non-fibrous)	2156916
Sodium oxide	2152089
Aluminosilicate	2154751
Magnesium oxide	2151719
Potassium oxide	2352276
Water	2317912
Quartz	2388784

Council of European Communities Directive on Classification, Packaging and Labelling of Dangerous Substances/Preparation (67/548/EEC & 88/379/EEC):

No Dangerous Goods Label Required.

Canada

Canadian Hazard Products Act:

This product is not classified as a controlled product under regulations pursuant to the federal Hazardous Product Act (*e.g.* WHMIS).

HMIS™ - Hazardous Materials Identification System

HMIS™ Ratings	
HEALTH	1*
FLAMMABILITY	0
REACTIVITY	0

0 - minimal hazard
1 - slight hazard
2 - moderate hazard
3 - serious hazard
4 - severe hazard
* - may cause cancer

Valco Instruments Co. Inc.
VICI AG International

GAS PURIFICATION

Fittings and Gas Purity

Basically, the point to remember is "the fewer the better". Every connection in your gas delivery system has the potential for leaks; the more fittings you have, the greater the potential. In the illustration below, several gas purification options are depicted:

- The Metronics gas specific purifier minimizes the number of fittings. Total fittings: 2
- The "Manifold System" has two compression fittings for the system and one organic O-ring seal for each cartridge. Total fittings: at least 5
- A typical "Contaminant Trap" configuration has several components. Before the gas supply even enters the GC there are at least 4 modules. Total fittings: at least 8

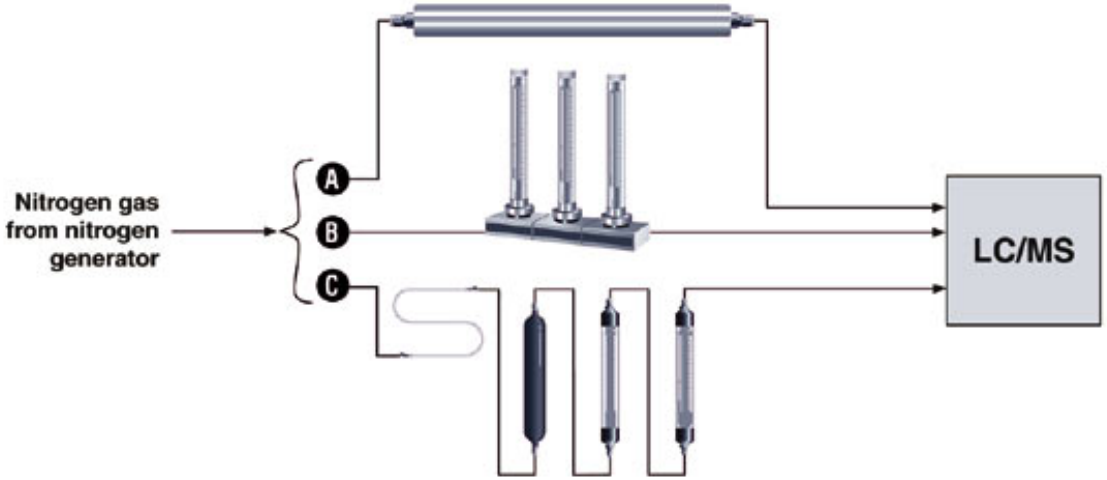

MORE INFORMATION

- Contact Metronics to find out more about VICI Metronics gas purifiers. North American customers can call toll-free (877) 737-1887.

Gas Purifier for Nitrogen Generators

- Specifically designed to purify nitrogen produced from nitrogen generators
- Decrease baseline noise and increase LC/MS sensitivity
- Reduce background noise and ghost peaks

Description

VICI Metronics nitrogen purifiers are optimized for the high flow nitrogen gas supply used on LC/MS instruments. Several types of contaminants are detrimental to LC/MS performance – notably moisture, hydrocarbons, and halocarbons. A Metronics nitrogen purifier module placed in line with the nitrogen gas delivery system removes these contaminants, retaining them for the operating life of the purifier.

The purifier reduces most contaminant levels from many parts per million to levels that are below the lower limit of analytical detection, and absorbs a larger number and a greater variety of contaminants than other commonly used adsorptive materials. In particular, the Metronics nitrogen purifier has been shown to out perform the carbon-based hydrocarbon traps previously used for this application.

Our successive bed format achieves the highest purity gas commercially available

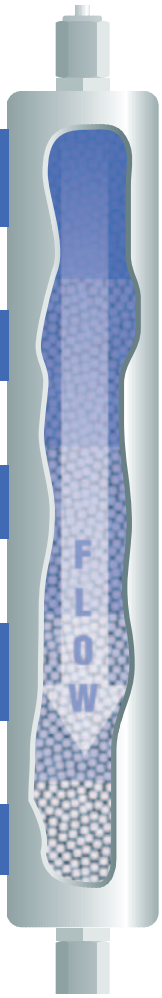

- Two very high capacity hydrocarbon and moisture sorbents at the inlet for effective contaminant removal
- Unique proprietary broad spectrum sorbent material for multiple contaminant removal
- Multiple bed format to allow several step reduction in contaminants
- Removal of H_2O, halocarbons, hydrocarbons, CO, CO_2, H_2, and sulfur containing compounds with a single purifier
- Very high efficiency sorbents at the outlet for trace contaminant removal

Fittings: the Fewer the Better

Every connection in your gas delivery system has the potential for leaks; the more fittings you have, the greater the potential. In the illustration below, several gas purification options are depicted:

A The VICI Metronics nitrogen purifier minimizes the number of fittings. Total: **2 fittings**

B The "Manifold System" has two compression fittings for the system and one organic O-ring seal for each cartridge. Total: **At least 5 fittings**

C A typical "Contaminant Trap" configuration has several components. Before the gas supply even enters the instrument, there are at least 4 modules. Total: **At least 8 fittings**

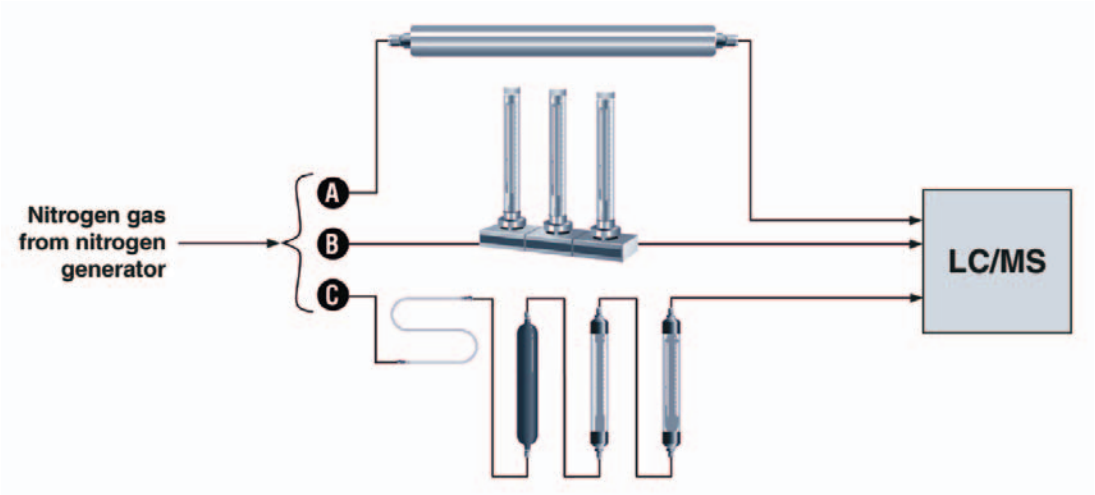

Specifications

Length ..... 53.3 cm (21")
Diameter..... 3.8 cm (1.5")
Maximum inlet pressure ..... 6895 kPa (1000 psi)
Maximum recommended flow ..... 12 L/min
Pressure drop, 827 kPa (120 psi) inlet, at a flow of 0 to 500 ml/min ..... <0.20 psi
Compression end fittings ..... 1/8" or 1/4"
Shipping weight .....1300 g (3.04 lb)

Ordering Information

Product Description	Fitting	Product no.
Nitrogen purifier for nitrogen generators	1/8"	P-350-1
	1/4"	P-350-2

MATERIAL SAFETY DATA SHEET

1 Product and Company Identification

Product Name: **Purifier for Nitrogen Generator**

Company Name:

VICI® Metronics Inc
26272 Twelve Trees Ln NW
Poulsbo, WA 98370

Emergency Contact Number
1-877-737-1887 or 1-360-697-9199

2 Composition

Ingredient	CAS No.	Wt%	ACGIH TLB-TWA	OSHA PEL-TWA
Silicon oxide (synthetic)	7631-86-9	< 45	10 mg/m^3 Inhalable 3 mg/m^3 Respirable	15 mg/m^3 Total dust 5 mg/m^3 Respirable fraction
Aluminum oxide (non-fibrous)	1344-28-1	< 32	10 mg/m^3	15 mg/m^3 Total dust 5 mg/m^3 Respirable dust
Sodium oxide	1313-59-3	< 15	N/E	N/E
Aluminosilicate	1327-36-2	< 10	10 mg/m^3 Inhalable dust 3 mg/m^3 Respirable dust	15 mg/m^3 Total dust 5 mg/m^3 Respirable dust
Magnesium oxide	1309-48-4	< 3	10 mg/m^3 Fume	15 mg/m^3 Fume, total particulate
Potassium oxide	12136-45-7	< 2	N/E	N/E
Water	7732-18-5	< 2	N/E	N/E
Quartz	14808-60-7	< 1	0.05 mg/m^3 Respirable dust	10 mg/m^3 Total dus 3.3 mg/m^3 Respirable dust

Abbreviations:

N/E - None established
CAS - Chemical Abstracts Service
ACGIH - American Conference of Governmental Industrial Hygienists
TLV - Threshold Limit Value
OSHA - Occupational Safety and Health Administration - USA
TWA - Time Weighted Average
PEL - Permissible Exposure Limit
STEL - Short-Term Exposure Limit

3 Hazard Identification

Emergency Overview

This product is in a sealed container. Exposure can only take place if the integrity of the container is compromised. In case the container is opened, the contained product can cause irritation to the eyes, skin, or upper respiratory system. Quartz may cause cancer.

Potential Health Effects

Primary Routes of Exposure: The product is in a sealed container. As long as the container is not opened, exposure should not take place.

Skin Contact: May cause skin irritation with repeated or prolonged exposure.

Eye Contact: Dust and/or product may cause eye discomfort and/or irritation seen as tearing and reddening.

Ingestion: This product is considered to have a low order of oral toxicity.

Inhalation: Inhalation of product and/or dust may cause irritation of the respiratory system.

Target Organ: Prolonged or repeated exposure may cause lung injury or cancer.

Carcinogenicity Classification

International Agency for Research on Cancer (LARC)

Silicon oxide (synthetic) - Not classifiable as human carcinogen (Group 3)

Crystalline silica inhaled in the form of quartz from occupational sources is carcinogenic to humans. (IARC Group 1).

U.S. National Toxicology Program (NTP)

Not Regulated

Quartz - Known Human Carcinogen

U.S. Occupational Safety and Health Administration (OSHA)

Neither the product nor the component(s) are classified or regulated.

4 First Aid Measures

Skin Contact: Wash affected area with soap and water. If irritation develops, obtain medical attention.

Eye Contact: Flush with water for at least 15 minutes. If irritation occurs, obtain medical attention.

Ingestion: Do not induce vomiting. Obtain medical attention.

Inhalation: Remove affected person to fresh air. If respiratory problems develop, obtain medical attention.

Notes to Physician: Hydrocarbons and other materials that contact the product during normal use can be retained on the product. The retained materials may be hazardous. Identify the retained material and treat accordingly.

5 Fire Fighting Measures

Flash Point: Unused material will not burn.

Extinguishing Media: Use media appropriate for surrounding fire.

Fire and Explosion Hazards: Used material may contain materials of a hazardous nature. The user of this product must identify the hazards of the retained material and inform the fire fighters of these hazards.

6 Accidental Release Measures

Large Spill: Isolate the affected areas. Confine entry into the affected area to those persons properly protected. Special attention should be given to eye, skin, and respiratory protection because recovery of dry product is expected to generate dust. Sweep, shovel or vacuum spilled product into appropriate containers. (Do not use a vacuum if material has contacted a hydrocarbon material.)

Small Spill: Sweep or vacuum spilled product into appropriate container. (Do not use a vacuum if material has contacted a hydrocarbon.) Product should be disposed in accordance with all applicable government regulations. See section 13 of MSDS, Disposal Information.

7 Handling and Storage

The product is in sealed containers. In the event the seal on the container is breached, store the product in tightly closed, properly labeled containers. Store out of direct sunlight. Store in dry area.

8 Exposure Controls and Personal Protection

Respiratory Protection: Product is in a sealed container. As long as the seal on the container is not breached, respiratory protection is not needed. If the container seal is breached and natural ventilation is inadequate, use mechanical ventilation, other engineering controls, or a toxic dust respirator (in USA - NIOSH/MSHA approved) to prevent inhalation of product dust.

Skin Protection: Use gloves to avoid prolonged or repeated skin contact.

Eye Protection: Safety glasses or goggles as necessary to prevent eye contact.

9 Physical and Chemical Properties

These data do not represent technical or sales specifications.

Appearance:	Material is in a sealed container
Odor:	None
pH:	Not applicable
% Volatile:	Not applicable
Pour Point:	Not applicable
Viscosity:	Not applicable
Vapor Density:	Not applicable
Specific Gravity:	Not applicable
Apparent Bulk Density:	0.7 ± 0.1 g/cc
Solubility in Water:	Negligible
Boiling Point:	Not applicable
Freezing Point:	Not applicable
Melting Point:	Not applicable
Vapor Pressure	Not applicable

10 Stability

Stability:	Stable.
Conditions to Avoid:	None known.
Hazardous Decomposition Products:	Hydrocarbons and other materials that contact the product during normal use can be retained on the product. It is reasonable to expect that decomposition products will come from these retained materials of use.
Hazardous Polymerization:	Will not occur.
Incompatible Materials:	Contact with acids may cause leaching of metals.

11 Toxicological Information

Acute Oral Toxicity:	An oral LD_{50} is not available for this product.
Acute Dermal Toxicity:	A dermal LD_{50} is not available for this product.
Acute Inhalation Toxicity:	An inhalation LC_{50} is not available for this product
Irritation:	No data for this product.

Additional Toxicological Information:

Aluminum oxide:	Inhalation of finely divided particles may cause lung damage. Intrapleural TD_{LO}: 90 mg/kg (rat). Implant TD_{LO}: 200 mg/kg (rat). TD_{LO} is Toxic Dose Low.
Silicon oxide:	Exposure can cause lung disease called silicosis, with cough and shortness of breath.

12 Ecological Information

No data is available for the product.

13 Disposal Information

Dispose of the product in accordance with all applicable government regulations. This product (in its fresh unused state) is not listed by generic name or trademark name in the U.S. EPA's Resource Conservation and Recovery Act (RCRA) Hazardous Waste Management Regulations and does not possess any of the four identifying characteristics of hazardous waste (ignitability, corrosivity, reactivity, or toxicity).

14 Transportation Information

U.S. Department of Transportation Shipping Name:	Not regulated.
International Maritime Organization (IMO):	Not regulated.

United States

TSCA *(Toxic Substances Control Act):*

All the ingredients of this mixture are listed on the TSCA Chemical Substance Inventory.

CERCLA *(Comprehensive Environmental Response, Compensation, and Liability Act) Reportable Quantity:*

The following component(s) of this product is/are subject to release reporting under 40 CFR 302 when release exceeds the Reportable Quantity (RQ):

—None—

SARA *(Superfund Amendments and Reauthorization Act of 1986) Title III:*

Section 302 (Extremely Hazardous Substances):

The following component(s) of this product is/are subject to the emergency planning provisions of 40 CFR 355 when there are amounts equal or greater than the Threshold Planning Quantity (TPQ):

—None—

Section 313 (Toxic Chemicals):

The following component(s) have been specified as Toxic Chemicals under SARA Section 313 and may be subject to the Toxic Release Inventory (TRI) reporting requirements under 40 CFR 372:

—None—

European Union (EU)

European Inventory of Existing Commercial Chemical Substances:

All components of this preparation are included in EINECS/ELINCS.

Silicon oxide (synthetic)	2315454
Aluminum oxide (non-fibrous)	2156916
Sodium oxide	2152089
Aluminosilicate	2154751
Magnesium oxide	2151719
Potassium oxide	2352276
Water	2317912
Quartz	2388784

Council of European Communities Directive on Classification, Packaging and Labelling of Dangerous Substances/Preparation (67/548/EEC & 88/379/EEC):

No Dangerous Goods Label Required.

Canada

Canadian Hazard Products Act:

This product is not classified as a controlled product under regulations pursuant to the federal Hazardous Product Act (*e.g.* WHMIS).

HMIS™ - Hazardous Materials Identification System

HMIS™ Ratings	
HEALTH	1*
FLAMMABILITY	0
REACTIVITY	0

0 - minimal hazard
1 - slight hazard
2 - moderate hazard
3 - serious hazard
4 - severe hazard
* - may cause cancer

MATERIAL SAFETY DATA SHEET

1 Product and Company Identification

Product Name: **Liquid CO_2 Purifier**

Company Name:

VICI Mat/Sen
A division of VICI Metronics, Inc.
26272 Twelve Trees Ln NW
Poulsbo, WA 98370

Emergency Contact Number
1-800-MATSEN-1 or 1-800-628-7361

2 Composition

Ingredient	CAS No.	Wt%	ACGIH TLB-TWA	OSHA PEL-TWA
Silicon oxide (synthetic)	7631-86-9	< 50	10 mg/m³ Inhalable 3 mg/m³ Respirable	15 mg/m³ Total dust 5 mg/m³ Respirable fraction
Carbon	7440-44-0	< 30	None listed	None listed
Alumina	1344-28-1	< 25	10 mg/m³ Inhalable 3 mg/m³ Respirable	15 mg/m³ Total dust 5 mg/m³ Respirable fraction
Aluminum Phosphate	7784-30-7	< 10	2 mg/m³ Inhalable	None listed

Abbreviations:

N/E - None established
CAS - Chemical Abstracts Service
ACGIH - American Conference of Governmental Industrial Hygienists
TLV - Threshold Limit Value
OSHA - Occupational Safety and Health Administration - USA
TWA - Time Weighted Average
PEL - Permissible Exposure Limit
STEL - Short-Term Exposure Limit

3 Hazard Identification

Emergency Overview

This product is in a sealed container. Exposure can only take place if the integrity of the container is compromised. In case the container is opened, the contained product can cause irritation to the eyes, skin, or upper respiratory system.

Potential Health Effects

Target Organ: Prolonged or repeated exposure may cause lung injury or cancer.

Primary Routes of Exposure: The product is in a sealed container. As long as the container is not opened, exposure should not take place.

Skin Contact: May cause skin irritation with repeated or prolonged exposure.

Eye Contact: Dust may cause tearing, blurred vision, and photophobia. May cause chemical conjunctivitis and corneal damage.

Ingestion: May cause nausea, vomiting, abdominal pain, and increased salivation.

Inhalation: May cause lung damage. Olfactory fatigue may occur. Can produce delayed pulmonary edema. Inhalation of dust causes severe irritation of the upper respiratory trace, gastrointestinal disturbances, albuminuria, gradual loss of weight, and increasing weakness.

Chronic: Chronic inhalation may lead to decreased pulmonary function.

Carcinogenicity Classification

International Agency for Research on Cancer (LARC)

?.

U.S. National Toxicology Program (NTP)

?

U.S. Occupational Safety and Health Administration (OSHA)

?

4 First Aid Measures

Skin Contact: Flush skin with plenty of water for at least 15 minutes while removing contaminated clothing and shoes. Obtain medical attention if irritation develops or persists. Wash clothing before reuse.

Eye Contact: Flush eyes with plenty of water for at least 15 minutes, occasionally lifting the upper and lower eyelids. Obtain medical attention.

Ingestion: Do NOT induce vomiting. If victim is conscious and alert, give 2 - 4 cupfuls of milk or water. Never give anything by mouth to an unconscious person. Obtain medical attention.

Inhalation: Remove affected person to fresh air. If not breathing, give artificial respiration. If breathing is difficult, give oxygen. Obtain medical attention.

Notes to Physician: Treat symptomatically and supportively.

5 Fire Fighting Measures

General Information: As in any fire, wear a self-contained breathing apparatus in pressure-demand, MSHA/NIOSH (approved or equivalent), and full protective gear. During a fire, irritating and highly toxic gases may be generated by thermal decomposition or combustion. Will burn if involved in a fire.

Extinguishing Media: For a large fire, use water spray, fog, or regular foam. For small fires, use dry chemical, carbon dioxide, sand, earth, water spray, or regular foam. Cool containers with flooding quantities of water until well after fire is out.

Flash Point: Not applicable.

Autoignition Temperature: 452°C (845.60°C)

5 *(con't)* Fire Fighting Measures

Explosion Limits:	Upper: Not available Lower: Not available
NFPA Rating (estimated)	Health: 1; Flammability: 1; Instability: 0

6 Accidental Release Measures

General Information:	Use proper personal protective equipment as indicated in Section 8.
Spills/Leaks:	Remove all sources of ignition. Vacuum or sweep up material and place into a suitable disposal container. Scoop up with a nonsparking tool, then place into a suitable container for disposal. Avoid generating dusty conditions.

7 Handling and Storage

The product is in sealed containers. In the event the seal on the container is breached, store the product in tightly closed, properly labeled containers. Store out of direct sunlight. Store in dry area.

8 Exposure Controls and Personal Protection

Engineering controls:	Facilities storing or utilizing this material should be equipped with an eyewash facility and a safety shower. Use adequate general or local explosion-proof ventilation to keep airborne levels to acceptable levels.
Respiratory Protection:	Product is in a sealed container. As long as the seal on the container is not breached, respiratory protection is not needed. If the container seal is breached, follow the OSHA respirator regulations found in 29 CFR 1910.134 or European Standard EN 149. When a respirator is necessary, use one approved by NIOSH or European Standard EN 149.
Skin Protection:	Use gloves to avoid prolonged or repeated skin contact.
Eye Protection:	Wear safety glasses or goggles as described by OSHA's eye and face protection regulations in 29 CFR 1910.133 or European Standard EN166.
Clothing:	Wear appropriate protective clothing to minimize contact with skin.

9 Physical and Chemical Properties

These data do not represent technical or sales specifications.

Physical state: Material is in a sealed container

Appearance:	Not applicable	*Boiling Point:*	Not applicable
Odor:	Not applicable	*Freezing/Melting Point:*	Not applicable
pH:	Not applicable	*Decomposition Temperature:*	Not applicable
Vapor Pressure	Not applicable	*Solubility:*	Not applicable
Vapor Density:	Not applicable	*Specific Gravity/Density:*	Not applicable
Evaporation Rate:	Not applicable	*Molecular Formula:*	Not applicable
Viscosity:	Not applicable	*Molecular Weight:*	Not applicable

10 Stability

Stability:	Stable under normal temperatures and pressures.
Conditions to Avoid:	Dust generation, moisture, excess heat.
Hazardous Decomposition Products:	Carbon monoxide, carbon dioxide.
Hazardous Polymerization:	Has not been reported.
Incompatible Materials:	Oxidizing agents, alkali metals, iron oxide, lead oxide, liquid oxygen, manganese oxide, metallic salts, chlorinated paraffins, dibenzoyl peroxide, 1,4-diazabicyclo-{2,2,2}-octane, molybdenum(IV) oxide, nitrobenzaldehyde, potassium hydroxide, sodium hydrogen carbonate.

11 Toxicological Information

Acute Oral Toxicity:	An oral LD_{50} is not available for this product.
Acute Dermal Toxicity:	A dermal LD_{50} is not available for this product.
Acute Inhalation Toxicity:	An inhalation LC_{50} is not available for this product
Irritation:	No data available.
Carcinogenicity:	No data available.
Epidemiology:	No data available.
Teratogenicity:	No data available.
Reproductive effects:	No data available.
Neurotoxicity:	No data available.
Mutagenicity:	No data available.
Other studies:	No data available.

12 Ecological Information

No data is available for the product.

13 Disposal Information

Dispose of the product in accordance with all applicable government regulations. This product (in its fresh unused state) is not listed by generic name or trademark name in the U.S. EPA's Resource Conservation and Recovery Act (RCRA) Hazardous Waste Management Regulations and does not possess any of the four identifying characteristics of hazardous waste (ignitability, corrosivity, reactivity, or toxicity).

Chemical waste generators must determine whether a discarded chemical is classified as a hazardous waste. U.S. EPA guidelines for the classification determination are listed in 40 CFR Parts 261.3. Additionally, waste generators must consult state and local hazardous waste regulations to ensure complete and accurate classification.

RCRA P-Series: None listed.
RCRA U-Series: None listed

14 Transportation Information

Product Label:	VICI Mat/Sen Liquid CO2 Purifier
U.S. Department of Transportation Shipping Name:	Not regulated.
International Maritime Organization (IMO):	Not regulated.

United States

TSCA *(Toxic Substances Control Act):*

All the ingredients of this mixture are listed on the TSCA Chemical Substance Inventory.

CERCLA *(Comprehensive Environmental Response, Compensation, and Liability Act) Reportable Quantity:*

The following component(s) of this product is/are subject to release reporting under 40 CFR 302 when release exceeds the Reportable Quantity (RQ):

—None—

SARA *(Superfund Amendments and Reauthorization Act of 1986) Title III:*

Section 302 (Extremely Hazardous Substances):

The following component(s) of this product is/are subject to the emergency planning provisions of 40 CFR 355 when there are amounts equal or greater than the Threshold Planning Quantity (TPQ):

—None—

Section 313 (Toxic Chemicals):

The following component(s) have been specified as Toxic Chemicals under SARA Section 313 and may be subject to the Toxic Release Inventory (TRI) reporting requirements under 40 CFR 372:

Alumina: 1344-28-1

European Union (EU)

European Inventory of Existing Commercial Chemical Substances:

All components of this preparation are included in EINECS/ELINCS.

Silicon oxide (synthetic)	2315454
Aluminum Phosphate	??
Alumina	??
Carbon	??

Council of European Communities Directive on Classification, Packaging and Labelling of Dangerous Substances/Preparation (67/548/EEC & 88/379/EEC):

No Dangerous Goods Label Required.

Safety phrases: S24/25 Avoid contact with skin and eyes.

Canada

Canadian Hazard Products Act:

This product is not classified as a controlled product under regulations pursuant to the federal Hazardous Product Act (*e.g.* WHMIS).

Canadian Ingredient Disclosure List:

Carbon
Alumina
Silicon Oxide

Summary of Changes: ??
I.D./Form: ??
Supersedes: ??

HMIS™ - Hazardous Materials Identification System

HMIS™ Ratings	
HEALTH	1*
FLAMMABILITY	0
REACTIVITY	0

????

0 - minimal hazard
1 - slight hazard
2 - moderate hazard
3 - serious hazard
4 - severe hazard
* - may cause cancer

GC ACCESSORIES
GAS PURIFICATION ESSENTIALS

What's **NEW?** look for this circle

Restek provides the following total gas system solution:

- Restek gas purifiers provide cost-effective gas purity assurance.
- Restek stainless steel and copper tubing, precleaned and ready to use.
- Swagelok® and Parker A-Lok® tube fittings consistently deliver high-quality performance.
- Extensive line of hand tools to make your work easier and faster, including Restek's Electronic Leak Detector.
- Gas generators for an uninterupted supply of gas.
- Gas regulators for optimum line pressure control of all your chromatography gases.

Restek's Technical Service Team (800-356-1688, ext. 4 or support@restek.com) or your Restek representative can answer your questions and provide system-design advice. From the gas source to your point of use, we offer the products and services that ensure the purity of your gas.

Why do I need to use traps and where should I install them?
Carrier gas must contain less than 1 ppm of oxygen, water vapor, or any other trace contaminant, to prevent column degradation, shortened column lifetime, and increased stationary phase bleed. Contaminants cause ghost peaks to appear during temperature programming and degrade the validity of analytical data. The expense of using high-purity gases in combination with carrier gas purifiers will be offset by longer column lifetime and less instrument maintenance.

Moisture Removal
Moisture in carrier gas lines will prematurely degrade oxygen and hydrocarbon traps and increase detector noise (particularly with ECDs). As a precaution, we highly recommend installing a moisture trap before the hydrocarbon and oxygen traps on all carrier gas lines. Our favorite trap is the Super-Clean Ultra-High Capacity Moisture Filter (cat.# 22028, pg. 299).

Hydrocarbon Removal
Use a hydrocarbon trap if your gas has a potential source of hydrocarbon contaminants (e.g., an oil pump in an air compressor) or if you suspect you are observing carrier gas ghost peaks. Install the hydrocarbon trap after the moisture trap, to prevent moisture from degrading the hydrocarbon-trapping ability of the activated carbon in the hydrocarbon trap. We recommend the Super-Clean Ultra-High Capacity Hydrocarbon Filter (cat.# 22030, pg. 299).

Oxygen Removal
Oxygen is a column killer and can enter the system at any connection which is leaking. It is present even in ultra high purity gases, as minute leaks at fittings allow oxygen to influx against the concentration gradient. There are many choices for oxygen removal—the Super-Clean Ultra-High Capacity Oxygen Filter (cat.# 22029, pg. 299) is popular with Restek chemists. Because oxygen can enter a gas line at any fitting, the oxygen trap should be the last connection before the gas line enters the chromatograph.

Leak Checking
To prevent column degradation, increase column lifetime, and decrease stationary phase bleed, carrier gas should always contain <1 ppm oxygen. This can be monitored by continually leak checking all gas system connections using Restek's Electronic Leak Detector (cat.# 22839, page 296).

for **more** info

Questions about which carrier gas purifier to use?
Call 800-356-1688 or 814-353-1300, ext. 4, or contact your Restek representative to discuss your application with our technical service chemists.

Restek Gas Management System

- Removes moisture, hydrocarbons, and oxygen from carrier gas, extending column lifetime.
- Produces high-purity carrier gas for most applications.
- Includes one each: moisture, hydrocarbon, and indicating oxygen trap.
- Replacing traps is safe and easy.
- Maximum flow: 1 liter/minute.

Dimensions:
12" x 14" x 3"
(30.5 x 35.6 x 7.6 cm)

Restek has put together a convenient unit providing gas purification all in one step. Complete with an indicating trap, your gas purification issues are handled in one central location.

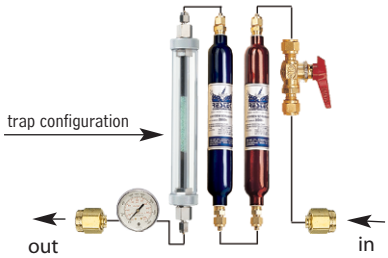

did you **know**?

The Restek Gas Management System removes water vapor (to 10 ppb), hydrocarbons (to 0.1 ppm), and oxygen (to less than 0.1 ppm) with three traps housed in one unit.

Description	Fittings	qty.	cat.#	price
Restek Gas Management System	includes fittings for 1/8" and 1/4" gas line	kit	21999	
Replacement Traps		**qty.**	**cat.#**	**price**
High-Capacity Moisture Trap	1/8" Nickel-Plated Brass	ea.	21997	
Capillary-Grade Hydrocarbon Trap	1/8" Nickel-Plated Brass	ea.	21991	
Indicating Oxygen Trap	1/8" Nickel-Plated Brass	ea.	22010	

Restek Electronic Leak Detector

Don't let a small leak turn into a costly repair—protect your instrument and analytical column by using a Restek Leak Detector.

Backed by a 1-year warranty, the new Restek Leak Detector sets an industry standard for performance and affordability in hand-held leak detectors.

22839

Leak Detector Facts

Detectable gases:	helium, nitrogen, argon, carbon dioxide, hydrogen
Battery:	Rechargeable Ni-MH internal battery pack (6 hours normal operation)
Operating Temperature Range:	32°-120°F (0°-48°C)
Humidity Range:	0-97%
Warranty:	one year
Certifications:	CE, Ex, Japan
Compliance:	WEEE, RoHS

Description	qty.	cat.#	price
Leak Detector with Hard-Sided Carrying Case and Universal Charger Set (US, UK, European, Australian)	ea.	22839	
Leak Detector Routine Maintenance Review**	ea.	22839-R	
Soft-Side Storage Case	ea.	22657	
Small Probe Adaptor	ea.	22658	

22658

*Caution: The Restek Electronic Leak Detector is designed to detect trace amounts of hydrogen in a noncombustible environment. It is NOT designed for determining leaks in a combustible environment. A combustible gas detector should be used for determining combustible gas leaks under any condition. The Restek Electronic Leak Detector may be used for determining trace amounts of hydrogen in a GC environment only.
**Routine maintenance includes inspection of the probe tip, internal/external tubing and a battery replacement.

tech tip

Avoid using liquid leak detectors on a GC! Liquids can be drawn into the system.

for **more** info

See **page 273** for more information on the Restek Electronic Leak Detector.

Dimensions: 9¼" x 2" (23.5 x 5.1 cm)

22081

High-Capacity Indicating Oxygen Trap

- Indicator changes from dark blue to black as oxygen & water are trapped.
- Lasts longer than three smaller traps.
- Use with all carrier gases.
- Ambient operating temperature, 100 psi (689 kPa) operating pressure.
- Built-in frit traps microparticles.
- Outlet gas purity:
  - O_2 < 0.1 ppm when inlet does not exceed 15 ppm.
  - H_2O < 0.5 ppm when inlet does not exceed 10 ppm.
- Maximum operating pressure: 150 psi (1,034 kPa).
- Maximum flow: 16.5 L/min.

Description	Fittings	qty.	cat.#	price
High-Capacity Indicating Oxygen Trap	⅛" Compression Tube Brass	ea.	20624	
High-Capacity Indicating Oxygen Trap	¼" Compression Tube Brass	ea.	20623	
Replacement Cartridge (fits ¼" or ⅛" housing)		ea.	20625	
Replacement O-Rings (5 small O-rings and 5 large O-rings)		kit	22081	

Dimensions: 10" x 1¼" (25.4 x 3.2 cm)

Indicating Oxygen Trap

- Indicator changes from light green to grey as oxygen is trapped.
- Heavy-walled glass body, protected by polycarbonate sleeve, prevents oxygen & water infusion.
- Prepurged for fast stabilization.
- 100 psi (689 kPa) maximum operating pressure.
- Reduces oxygen to 0.1 ppm.
- 10 µm frits at inlet and outlet.

Description	Fittings	qty.	cat.#	price
Indicating Oxygen Trap	⅛" Brass	ea.	22010	
Indicating Oxygen Trap	¼" Brass	ea.	22011	

Dimensions: 11" x 1½" (27.9 x 3.8 cm)

High-Capacity Oxygen Trap

- Removes up to 600 mg of oxygen or 2 g of water.
- Long life—typically purifies more than five 200 ft^3 cylinders.
- Reduces oxygen to 15 ppb.
- Maximum operating pressure: 250 psi (1,724 kPa).
- Flow: 3 L/min. @ 32 psi (221 kPa).

Description	Fittings	qty.	cat.#	price
High-Capacity Oxygen Trap	⅛" Nickel-Plated Brass	ea.	20601	
High-Capacity Oxygen Trap	¼" Nickel-Plated Brass	ea.	20600	

Rechargeable Molecular Sieve S-Trap

- Traps water vapor; increases column and oxygen trap lifetime.
- Reduces baseline noise from sensitive detectors such as ECDs and mass spectrometers.
- Activated and ready to use.
- Reduces water to less than 1 ppm.
- Fits in GC oven for easy thermal recharging.
- Maximum flow: 1 L/min.

Dimensions: 6¾" x 5⅝" (17.1 x 14.3 cm)

Description	Fittings	qty.	cat.#	price
Rechargeable Molecular Sieve S-Trap	⅛" Brass	ea.	20686	
Rechargeable Molecular Sieve S-Trap	¼" Brass	ea.	20685	

Dimensions: 11" x 1½" (27.9 x 3.8 cm)

High-Capacity Moisture Trap

- Purged with ultra-high-purity helium; ready to use.
- Reduces water to less than 15 ppb.
- Maximum operating pressure: 250 psi (1,724 kPa).
- Maximum flow: 1.25 L/min.

Description	Fittings	qty.	cat.#	price
High-Capacity Moisture Trap	⅛" Nickel-Plated Brass	ea.	21997	
High-Capacity Moisture Trap	¼" Nickel-Plated Brass	ea.	20638	

Dimensions: 13" x 2" (33 x 5.1 cm)

Indicating Moisture Trap

- Reduces water to less than 10 ppb; indicator changes from orange to green at 5% relative humidity.
- Prepurged for fast stabilization.
- Reduces noise from high-sensitivity detectors.
- Heavy-walled glass body prevents oxygen & water infusion.
- 10 µm frit prevents microparticulate damage to needle valves and flow controllers.
- Maximum operating pressure: 100 psi (689 kPa).

Description	Fittings	qty.	cat.#	price
Indicating Moisture Trap	⅛" Brass	ea.	22014	
Indicating Moisture Trap	¼" Brass	ea.	22015	

Gas Traps

Dimensions: 11" x 1½" (27.9 x 3.8 cm)

Capillary-Grade Hydrocarbon Trap

- Packed with an extremely high surface area, baked coconut shell-based activated carbon.
- Purged with ultra-high purity helium.
- Reduces organics to 0.1 ppm (assuming 100 ppm input).
- Maximum operating pressure: 250 psi (1,724 kPa).

Description	Fittings	qty.	cat.#	price
Capillary-Grade Hydrocarbon Trap	⅛" Nickel-Plated Brass	ea.	21991	
Capillary-Grade Hydrocarbon Trap	¼" Nickel-Plated Brass	ea.	21992	

Dimensions: 9¼" x 2¼" (23.5 x 5.7 cm)

Refillable Hydrocarbon Trap

- Removes trace impurities from carrier gas.
- Reduces organics to 0.1 ppm (assuming 100 ppm input).
- 60 µm frit prevents gas contamination by purifier particles.
- Good for purge & trap systems.
- Refillable and rechargeable.
- Maximum operating pressure: 125 psig (862 kPa).
- Maximum flow: 5 L/min.

Description	Fittings	qty.	cat.#	price
Refillable Hydrocarbon Trap	⅛" Nickel-Plated Brass	ea.	22012	
Refillable Hydrocarbon Trap	¼" Nickel-Plated Brass	ea.	22013	
Carbon Refill (two recharges)		pint	20626	

Hydrocarbon S-Trap

- Removes hydrocarbons and other contaminants.
- Reduces organics to 0.1 ppm (assuming 100 ppm input).
- Each individually activated to ensure maximum efficiency.
- Fits in GC oven for easy thermal recharging.
- Maximum operating pressure: 60 psi (414 kPa).

Dimensions: 6¾" x 5⅝" (17.1 x 14.3 cm)

Description	Fittings	qty.	cat.#	price
Hydrocarbon S-Trap	⅛" Brass	ea.	22016	

Dimensions: 6" x 1¾" (15.2 x 4.4 cm)

Indicating Hydrocarbon Trap for Air Compressors

- Pass compressed air from an oil-filled air compressor through this trap, to remove oil vapors and mist.
- Indicator changes from pale pink to deep pink.

Description	Fittings	qty.	cat.#	price
Indicating Hydrocarbon Trap for Air Compressors	⅛" Brass	ea.	20637	
Indicating Hydrocarbon Trap for Air Compressors	¼" Brass	ea.	20636	

Dimensions: 6" x 1" (15.2 x 2.5 cm)

High-Capacity Split Vent Trap

- Reduces the release of hazardous materials from the capillary split vent into the lab.
- Includes connecting lines and mounting kit.

Description	Fittings	qty.	cat.#	price
High-Capacity Split Vent Trap	⅛"	ea.	20698	
High-Capacity Split Vent Trap	⅛"	5-pk.	20699	

Dimensions: 6" x 1" (15.2 x 2.5 cm)

ECD Vent Trap

- Reduces the release of hazardous materials from the ECD vent into the lab.
- Includes connecting lines and mounting kit.

Description	Fittings	qty.	cat.#	price
ECD Vent Trap	⅛"	ea.	22017	

tech tip

Carrier Gas Purity

Carrier gas should contain less than 1 ppm of oxygen, moisture, or other trace contaminants, to prevent column degradation, increase column lifetime, and decrease stationary phase bleed.

The expense of using high-purity gases in combination with carrier gas line purifiers will be offset by longer column lifetime and less GC maintenance.

Restek Super-Clean Gas Filters

- High-purity output ensures 99.9999% pure gas (at max. flow of 2 L/min.).
- "Quick connect" fittings for easy, leak-tight cartridge changes.
- Glass inside to prevent diffusion; polycarbonate housing outside for safety.
- All traps measure 10⁵/₈" x 1³/₄" (27 x 4.4 cm).
- Each base plate unit measures 4" x 4" x 1⁷/₈" (10.2 x 10.2 x 4.8 cm).

Table I Each Super-Clean gas filter provides high-purity outlet gas.

Type of Filter	Outlet Gas Quality (%)	Maximum Pressure/ Maximum Flow Rates	Use for:	Indicator Color Change	Capacity H_2O (g)	Capacity O_2 (mL)	Capacity Hydrocarbons (g)	Estimated Lifetime (years)
Moisture cat.# 22028	>99.9999	11 bar 159 psi/ 7 L/min.	Inert carrier gas Air Hydrogen	Yellow/orange to clear	7.2	—	—	>2
Oxygen cat.# 22029	>99.9999	11 bar 159 psi/ 7 L/min.	Inert carrier gas	Green to grey	NA	1,000	—	>2
Hydrocarbons cat.# 22030	>99.9999	11 bar 159 psi/ 7 L/min.	Inert carrier gas Air Hydrogen	No indicator	NA	—	12[3]	>2
Fuel Gas[1] cat.# 22022	>99.9999	11 bar 159 psi/ 7 L/min.	Inert carrier gas Air Hydrogen	Yellow/orange to clear	3.5	—	24[3]	>1.5
Triple[2] cat.# 22020	>99.9999	11 bar 159 psi/ 7 L/min.	Inert carrier gas	Yellow/orange to clear Green to grey	1.8	500	4[3]	>1
Helium Specific[2] cat.# 21982	>99.9999	11 bar 159 psi/ 7 L/min.	Helium	Yellow/orange to clear Green to grey	1.8	500	—	>1

[1]Removes hydrocarbons, moisture.
[2]Removes hydrocarbons, moisture, oxygen.
[3]As *n*-butane.

did you **know**?

All Restek Super-Clean gas filter cartridges (except hydrocarbon filter cat.# 22030) feature easy-to-read indicators. The indicator code is shown on every trap so there is no confusion about when to replace it.


22020


21982


22025

Restek Super-Clean Gas Filter Kits and Replacements

Description	qty.	cat.#	price
Carrier Gas Cleaning Kit			
Includes: mounting base plate, ¹/₈" inlet/outlet fittings, and oxygen/moisture/hydrocarbon Triple Gas Filter	kit	22019	
Fuel Gas Purification Kit			
Includes: mounting base plate, ¹/₈" inlet/outlet fittings, and hydrocarbon/moisture Fuel Gas Filter	kit	22021	
Ultra-High Capacity Hydrocarbon Filter	ea.	22030	
Ultra-High Capacity Moisture Filter	ea.	22028	
Ultra-High Capacity Oxygen Filter	ea.	22029	
Replacement Triple Gas Filter (removes oxygen, moisture and hydrocarbons)	ea.	22020	
Replacement Fuel Gas Filter (removes moisture and hydrocarbons)	ea.	22022	
Helium-Specific Carrier Gas Cleaning Kit			
Includes: mounting base plate, ¹/₈" inlet/outlet fittings, and oxygen/moisture/hydrocarbon Helium-Specific Filter	kit	21983	
Replacement Helium-Specific Gas Filter (removes oxygen, moisture and hydrocarbons)	ea.	21982	
Gas Filter Bundle Kit			
Includes: one Triple Gas Filter (cat.# 22020) and two Fuel Gas Filters (cat.# 22022)	kit	22031	

tech tip

Oxygen and Moisture Traps

Restek highly recommends oxygen and moisture traps for make-up gas when operating sensitive detectors such as electron capture detectors (ECD). The hydrogen reaction gas for sensitive electrolytic conductivity detectors (ELCD) also requires a hydrocarbon trap, to remove trace impurities.

Super-Clean Gas Filters

22026

22025

22027

Restek Filter Base Plates

- Standard base plate fittings are 1/8". To adapt to 1/4", order 1/8" to 1/4" tube-end unions.
- End fittings available in brass or stainless steel.
- Base plates fit all Super-Clean gas filters listed.

		Brass			Stainless Steel	
Description	qty.	cat.#	price	qty.	cat.#	price
Filter Base Plate, Single-Position	ea.	22025	$231	ea.	22344	
Filter Base Plate, 2-Position	ea.	22026	$425	ea.	22345	
Filter Base Plate, 3-Position	ea.	22027	$609	ea.	22346	

Wall Mounting Bracket

Base plates can be mounted by using screws and the mounting holes on the base plate, or by using this optional wall mounting bracket.

Description	qty.	cat.#	price
Wall Mounting Bracket for Super-Clean Base Plates	ea.	21984	

Replacement O-Rings for Cartridge Base Plates

Pack includes 10 large O-rings and 10 small O-rings.

Description	qty.	cat.#	price
Replacement O-Rings for Cartridge Base Plates	20-pk.	22023	

1/8-Inch to 1/4-Inch Tube-End Unions

To adapt 1/8" Super-Clean base plate fittings to 1/4", use 1/8" to 1/4" tube-end unions.

21833

		Brass			Stainless Steel	
Description	qty.	cat.#	price	qty.	cat.#	price
Tube-End Reducer, 1/8" tube to 1/4"	5-pk.	21833	$31	2-pk.	21933	

Restek Super-Clean Gas Trapping System for LC/MS

A Super-Clean quick-change cartridge system efficiently removes hydrocarbons from nitrogen!

- Changing filters is quick and easy.
- Up to 20 L of hydrocarbon-free nitrogen per minute.
- Filters connected in parallel to handle high flows of LC/MS.

20 L of purified nitrogen per minute!

Super-Clean Gas Filters provide high-purity outlet gas

Type of filter:	Hydrocarbon (charcoal)
Max. Flow:	20 L/min.
Outlet Gas Quality %:	99.9999%
Maximum Pressure:	11 bar/159 psi
Estimated Lifetime:	3 to 6 months

Description	qty.	cat.#	price
Super-Clean Gas-Trapping System (2-position base plate, 2 charcoal filters)	ea.	22062	
Replacement Hydrocarbon (Charcoal) Filters	2-pk.	22061	

also **available**

Looking for a nitrogen generator for your LC/MS?

Restek offers a full line of Parker LC/MS generators.

See **page 307**.

Restek Click-On Inline Super-Clean Purification Gas Traps

- High-purity output ensures 99.9999% pure gas.
- Click-On fittings for easy, leak-tight cartridge changes; brass or stainless steel, 1/4" or 1/8".
- Helium-Specific Triple Gas Trap is ideal for GC/MS—it contains oxygen, moisture, and hydrocarbon scrubbers in one cartridge.
- Triple Gas Trap is ideal for purifying carrier gas—it contains oxygen, moisture, and hydrocarbon scrubbers in one cartridge.
- Fuel Gas Trap is ideal for purifying flame ionization detector (FID) fuel gases, removing both moisture and hydrocarbons.

See next page for more Click-On Inline Super-Clean products.

Click-On adaptor connectors allow cartridges to be exchanged without introducing oxygen, moisture, and hydrocarbons. Spring-loaded check valves seal when a filter is removed and open only when a new filter has been locked in place.

Filter Type	Gas Quality at Outlet	Maximum Pressure	Maximum Flow (L/min.)	Use For	H_2O (g)	Capacity O_2 (mL)	Hydrocarbons (g) (*n*-butane)	Estimated Lifetime (years)
Moisture cat.#22467	>99.9999	11 bar 160 psi	25	Inert carrier gas, helium, air, H_2	15	NA	NA	>3
Oxygen cat.#22468	>99.9999	11 bar 160 psi	25	Inert carrier gas	NA	2,000	NA	>3
Hydrocarbon cat.#22466	>99.9999	11 bar 160 psi	25	Inert carrier gas, helium, air, H_2	NA	NA	24	>3
Fuel Gas[1] cat.#22465	>99.9999	11 bar 160 psi	25	Inert carrier gas, helium, air, H_2	7	NA	12	>2
Triple[2] cat.#22464	>99.9999	11 bar 160 psi	25	Inert carrier gas	4	1,000	8	>2

[1]Removes hydrocarbons, moisture.
[2]Removes hydrocarbons, moisture, oxygen.

Click-On Traps measure:
8 1/2" x 1 1/4" (21.6 x 3.2 cm)

NOTE: Super-Clean Gas Filters are recommended for purifying noncorrosive gases with low concentrations of contaminants. The maximum concentration of oxygen in the incoming gas stream for oxygen purifiers is 0.5%.

did you **know**?

Trap replacement depends on the quality of the incoming gas. Use the double connector and install an indicating cartridge after a trap to indicate when the trap should be replaced.

Restek Click-On Inline Super-Clean Gas Traps and Connector Kits

Description	qty.	cat.#	price
Carrier Gas Purification Kit			
Includes: (2) 1/8" SS connectors and (1) oxygen/moisture/hydrocarbon triple trap	kit	22456	
Includes: (2) 1/8" brass connectors and (1) oxygen/moisture/hydrocarbon triple trap	kit	22457	
Includes: (2) 1/4" SS connectors and (1) oxygen/moisture/hydrocarbon triple trap	kit	22458	
Includes: (2) 1/4" brass connectors and (1) oxygen/moisture/hydrocarbon triple trap	kit	22459	
Fuel Gas Purification Kit			
Includes: (4) 1/8" SS connectors and (2) hydrocarbon/moisture traps	kit	22460	
Includes: (4) 1/8" brass connectors and (2) hydrocarbon/moisture traps	kit	22461	
Includes: (4) 1/4" SS connectors and (2) hydrocarbon/moisture traps	kit	22462	
Includes: (4) 1/4" brass connectors and (2) hydrocarbon/moisture traps	kit	22463	

i tech tip

To prevent settling of dessicant, mount vertically, not horizontally.

Super-Clean Gas Filters

Click-On Inline Super-Clean Indicator

- Oxygen: green to grey
- Moisture: beige to clear

Description	qty.	cat.#	price
Click-On Inline Super-Clean Indicator (oxygen, moisture)	ea.	22474	

tech tip

Install an indicator after the Click-On inline gas filter so there is no confusion about when to replace the traps.

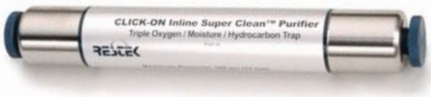

Click-On Inline Super-Clean Replacement Gas Traps

Description	qty.	cat.#	price
Triple Trap (removes oxygen, moisture and hydrocarbons)	ea.	22464	
Fuel Gas Trap (removes moisture and hydrocarbons)	ea.	22465	

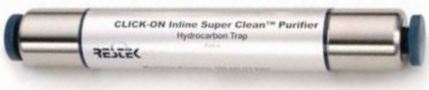

Click-On Inline Super-Clean Ultra-High Capacity Gas Traps

Description	qty.	cat.#	price
Ultra-High Capacity Hydrocarbon Trap	ea.	22466	
Ultra-High Capacity Moisture Trap	ea.	22467	
Ultra-High Capacity Oxygen Trap	ea.	22468	

Click-On Inline Super-Clean Connectors

Click-On connectors allow you to change traps quickly, without introducing oxygen into your system.

Each connector is $2^3/_8$" (6 cm) in length.

Description	Fittings	qty.	cat.#	price
Click-On Inline Super-Clean Connectors	$^1/_8$" Brass	2-pk.	22475	
Click-On Inline Super-Clean Connectors	$^1/_8$" Stainless Steel	2-pk.	22476	
Click-On Inline Super-Clean Connectors	$^1/_4$" Brass	2-pk.	22477	
Click-On Inline Super-Clean Connectors	$^1/_4$" Stainless Steel	2-pk.	22478	

Click-On Inline Super-Clean Double Connector

Connects any Click-On trap to a Click-On indicator.

Each double connector is 3" (8 cm) in length.

Description	qty.	cat.#	price
Click-On Inline Super-Clean Double Connector, Stainless Steel	ea.	22479	$215


22480


22481

Accessories

for Inline Super-Clean Gas Traps and Connectors

Description	qty.	cat.#	price
Wall-Mounting Clamps for Click-On Inline Super-Clean Gas Traps	4-pk.	22480	
Replacement O-Rings for Click-On Inline Super-Clean Connectors (includes 10 large and 10 small)	20-pk.	22481	

Helium-Specific Click-On Inline Super-Clean Gas Trap and Connector Kits

Description	qty.	cat.#	price
Helium-Specific Carrier Gas Cleaning Kits			
Includes: (2) $^1/_8$" SS connectors and (1) oxygen/moisture/hydrocarbon helium-specific triple trap	kit	22469	
Includes: (2) $^1/_8$" brass connectors and (1) oxygen/moisture/hydrocarbon helium-specific triple trap	kit	22470	
Includes: (2) $^1/_4$" SS connectors and (1) oxygen/moisture/hydrocarbon helium-specific triple trap	kit	22471	
Includes: (2) $^1/_4$" brass connectors and (1) oxygen/moisture/hydrocarbon helium-specific triple trap	kit	22472	
Replacement Trap			
Helium-Specific Replacement Triple Trap (removes oxygen, moisture and hydrocarbons)	ea.	22473	

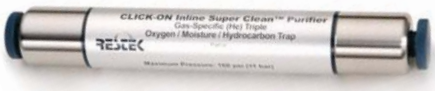

did you **know**?

Helium-Specific Click-On Inline Super-Clean Gas Trap and Kits are designed specifically for purification of helium in GC/MS systems.

VICI® Mat/Sen® Gas-Specific Purifier Modules

- Replace separate oxygen, moisture, and hydrocarbon traps with one multiple-bed purifier, specific for purifying helium, hydrogen, nitrogen, or air.
- Reduce gas impurities from ppm to low ppb levels.
- Decrease baseline noise and increase GC/MS sensitivity.
- Prepurged with the specified gas, to shorten downtime.

Dimensions: 21" x 1½" (53.3 x 3.8 cm)

Performance for these purifiers is optimized by incorporating a multiple-bed format that progressively lowers concentrations of contaminants at each successive bed. VICI® Mat/Sen® purifiers are guaranteed to produce gases that are purer than 99.9999%, when supplied with gas of 99.995% purity, and are prepurged with the specified gas to speed conditioning. Purifier capacity is approximately four tanks of gas at 99.995% (50 ppm) purity, and correspondingly longer for purer gases.

Please Note: We recommend using an indicating oxygen trap (e.g., cat.# 22029, pg. 225) downstream from a VICI® Mat/Sen® purifier to continually ensure gas purity and indicate absolute change-out time.

Specifications:

Length	21" (53.3 cm)
Diameter	1.5" (3.8 cm)
Maximum Inlet Pressure	1,000 psi (6895 kPa)
Maximum Recommended Flow	500 mL/min.
Pressure Drop from 120 psi (827 kPa) inlet at at 0-500mL/min.:	<0.20 psi (1.4 kPa)
End Fittings	compression, ⅛" or ¼", stainless steel
Shipping Weight	3.04 lb. (1,300 g)

Gas-Specific Purifier Module	Compression Tube Fittings ¼-inch qty.	cat.#	price	⅛-inch qty.	cat.#	price
Helium Purifier Module	ea.	22600		ea.	22601	
Hydrogen Purifier Module	ea.	22602		ea.	22603	
Nitrogen Purifier Module*	ea.	22604		ea.	22605	
Air Purifier Module	ea.	22606		ea.	22607	

*Warning: Do not use with nitrogen containing more than 500 ppm of oxygen. If the oxygen level in the stream exceeds 500 ppm, use an air purifier.

Dimensions: 13" x ½" (33 x 1.3 cm)

Thermal Gas High Capacity Purifier Replacement Getter Tube

Each replacement getter tube has 12 L oxygen and 35 L water vapor capacity at a minimum flow rate of 1 liter/minute and removes oxygen, water, carbon monoxide, carbon dioxide, hydrocarbons (except methane) to ppb levels; pure enough for MS. Typically requires replacement once per year.

Change tube when gas pressure drops.

Replacement Getter Tubes	qty.	cat.#	price
⅛" Fittings (Similar to Supelco part# 2-2396)	ea.	21661	
¼" Fittings (Similar to Supelco part# 2-2398)	ea.	21660	

Replacement getter tubes must be used with a Thermal Gas Purifier housing unit.

Gas Pressure Gauge Kit

- Use an in-line pressure gauge to indicate when a thermal gas purifier getter tube should be replaced.
- Includes ⅛" tee and 0–100 psi (0-689 kPa) gauge.

Description	qty.	cat.#	price
In-line Gas Pressure Gauge Kit for Thermal Gas Purifiers	kit	21657	

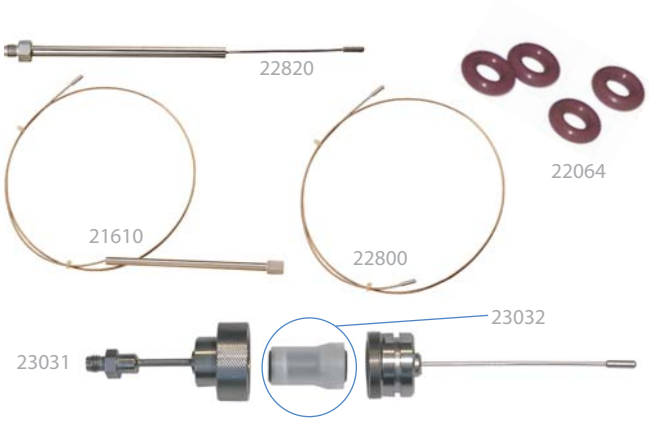

Replacement Chemical Traps

- Easy to install.
- Attach to same fittings as original manufacturer's equipment.
- Built-in frits retain fine particles; adsorbents remove both moisture and hydrocarbons.

Description	Similar to Agilent part #	qty.	cat.#	price
Replacement Split Vent Trap for Agilent 6890/6850 GCs	G1544-80550	ea.	22820	
Replacement Chemical Trap for Agilent 5890 GCs	05890-61260	ea.	21610	
Split Vent Line (32-inch) for Agilent GCs Includes: all installation hardware	19251-80525	2-pk.	22800	
O-Rings for Agilent Trap Fittings	5180-4181	25-pk.	22064	
Optional Split Vent Trap Assembly for Agilent 6890/6850 GCs	G1544-60610	kit	23031	
Replacement Traps (2) and O-Rings (4)	G1544-80530	kit	23032	

tech tip

Eliminate ghost peaks—change your chemical trap often!

Parker Balston® PEM Hydrogen Generators

- Proton Exchange Membrane (PEM) cell eliminates the need for liquid electrolytes.
- Reliably generate 99.9995% pure hydrogen—for better chromatography.
- Eliminates high-pressure cylinders—greater convenience and improved lab safety.
- Compact unit, requiring only one square foot of bench space.
- Quick and easy to service and maintain; unique display lighting changes color for easy status checks and water level indication.
- Comes with a set of universal power adapters for US, European, and Asian plug types.

Fuel-grade high purity hydrogen generators are safer alternatives to high-pressure gas cylinders. The new Proton Exchange Membrane (PEM) cell eliminates the use of liquid electrolytes with hydrogen generators. Deionized water is all that is required to generate hydrogen for weeks of continuous operation. With an output capacity of up to 510 cc/minute, one generator can supply 99.9995% pure hydrogen for up to several FIDs. Based on cylinder gas savings alone, a hydrogen generator pays for itself in one or two years.

Produced and supported by an ISO 9001 registered organization, Parker Balston® hydrogen generators are the first built to meet the toughest laboratory standards in the world: CSA, UL, cUL, and CE Mark. A great safety feature is the built-in sensing circuit, which shuts the generator down if a hydrogen leak is detected.

Specifications

Purity:	99.9995% pure hydrogen
Delivery Pressure:	10-100 psig ± 1 psig (69-689 kPa ± 7 kPa)
Outlet Port:	1/8" compression
Electrical Requirements:	100-230 VAC/50-60 Hz
Physical Dimensions:	17.12"h x 13.46"w x 17.95"d (43.48 x 34.19 x 45.6 cm)
Shipping Weight:	40 lbs. (18 kg) dry

free literature

Parker Balston® Hydrogen Generators

Download your free copy from **www.restek.com**

lit. cat.# 580053A

Description	Model #	Capacity	qty.	cat.#	price
Hydrogen Generator	H2PEM-100	100cc/min.	ea.	23065	
Hydrogen Generator	H2PEM-165	165cc/min.	ea.	23066	
Hydrogen Generator	H2PEM-260	260cc/min.	ea.	23067	
Hydrogen Generator	H2PEM-510	510cc/min.	ea.	23068	
Replacement and Maintenance Components for Hydrogen Generators (for all models listed above)					
Replacement Desiccant Cartridge for H2PEM Generators			ea.	23069	
6-Month Maintenance Kit for H2PEM Generators Includes: 1 deionizer cartridge, 1 water filter, 3 environmental filters			kit	23070	
24-Month Maintenance Kit for H2PEM Generators Includes: 1 deionizer cartridge, 1 water filter, 3 environmental filters, 1 water level sensor, 1 water pump, and 1 desiccant cartridge			kit	23071	

tech tip

Using purifying gas traps in combination with a gas generator can improve chromatography tremendously and improve column lifetime.

The combination of high-purity gas and gas purifying traps can save analytical time in the long run.

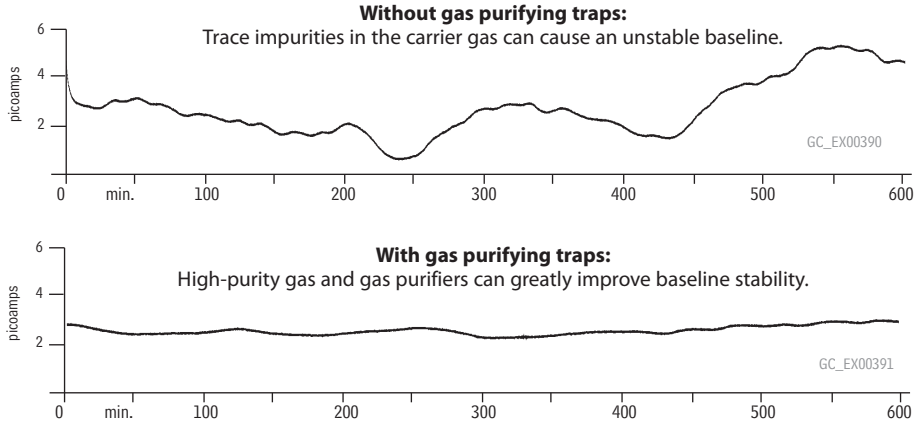

Parker Balston® Model FID-1000 and FID-2500 Gas Stations

- Single unit produces UHP zero air from house compressed air and 99.9995% pure hydrogen from deionized water.
- Ideal for supplying up to 5-6 FIDs.
- Eliminates inconvenient and dangerous gas cylinders.
- Silent operation, minimal operator attention required.

Parker Balston® Gas Stations provide both UHP grade hydrogen gas and zero grade air for flame ionization detectors. The system is specifically designed to supply gas to FIDs and to support flame thermionic and flame photometric detectors. The units produce zero air by purifying compressed air to a total hydrocarbon concentration of 0.1 ppm or less (measured as methane).

The hydrogen generators produce hydrogen gas from deionized water, using the principle of electrolytic dissociation of water and hydrogen proton conduction through a proton exchange membrane cell.

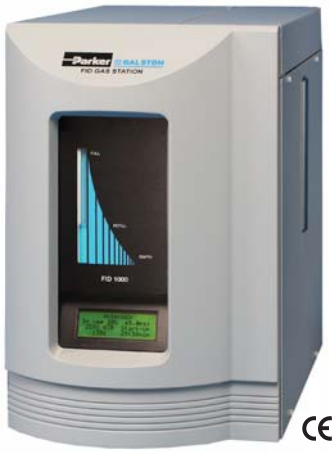

Parker Filtration

Produce zero air and pure hydrogen from one unit!

Specifications

Hydrogen Purity:	99.9995%
Zero Air Purity:	FID-1000:
	< 0.1 ppm total hydrocarbons as methane
	FID-2500:
	< 0.05 ppm total hydrocarbons as methane
Max. Hydrogen Flow Rate:	FID-1000: 90 cc/min.
	FID-2500: 250 cc/min.
Max. Zero Air Flow Rate:	FID-1000: 1000 cc/min.
	FID-2500: 2500 cc/min.

Power:	120 VAC/amp, 60 Hz, 400 watts
Hydrogen Outlet Pressure:	60 psig (414 kPa)
Zero Air Outlet Pressure:	40-125 psig* (276-862 kPa)
Inlet Connection:	1/4" NPT (female)
Outlet:	1/8" compression
Dimensions:	16.5"h x 10.5"w x 17"d
	(42 cm x 27 cm x 43 cm)
Weight:	53 lbs. (24kg)

*Zero air inlet requires minimum of 40 psig (276 kPa) compressed air pressure.

free literature

FID Gas Stations

Download your free copy from **www.restek.com**

lit. cat.# 580051

Compare baselines produced by a Parker Balston® FID Gas Station and bottled fuel air. The baseline produced by the Parker Balston® Generator is flat, with no fluctuations or peaks; the chromatogram from the bottled air fuel supply has many peaks ranging from 0.25 ppm to -0.25 ppm total hydrocarbons.

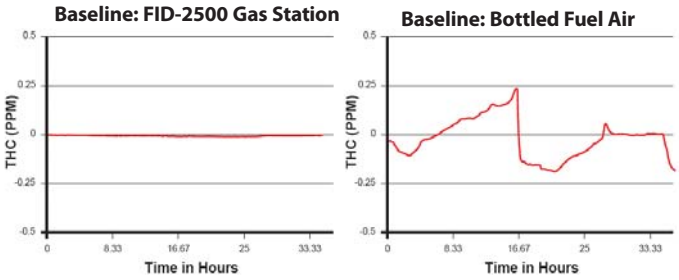

Description	Model #	qty.	cat. #	price
Gas Station	Model FID-1000 (ideal for 1-2 FIDs)	ea.	20177	
Gas Station	Model FID-2500 (ideal for 5-6 FIDs)	ea.	24913	
Replacement Components for FID Gas Stations				
Resin Bed Cartridge for Hydrogen Generators in FID-1000 and FID-2500 Gas Stations		ea.	24914	
Replacement Desiccant Cartridge		ea.	21671	
FID Gas Station Maintenance Kit Includes: 1 desiccant cartridge, 1 resin bed cartridge, 1 filter cartridge		ea.	24915	

ordering note

For **international orders**, please add the appropriate power cord suffix from the table below.

International Power Cord Sets

Just add the proper suffix to the catalog number for the gas generator you are ordering.

Location	qty.	cat.# suffix	price
United Kingdom (230VAC, 50/50Hz)	ea.	-550	
European (230VAC, 50/60Hz)	ea.	-551	
IEC Connector Only (230VAC, 50/60Hz)	ea.	-552	
Japanese (200VAC, 50/60Hz)	ea.	-556	
Japanese for Zero Air (100VAC, 50/60Hz)	ea.	-553	
Japanese for Hydrogen (100VAC, 50/60Hz)	ea.	-554	
Japanese for Nitrogen (100VAC, 50/60Hz)	ea.	-555	

Select the power cord you need.

21654

Parker Balston® Nitrogen Gas Generators

- Produces ultra-pure nitrogen (up to 99.9995%).
- Flows from 1 to 75+ lpm.
- Require only a compressed air source and 110 volt AC power.
- Typical applications include GC carrier gas, make-up gas, and low flow sample concentrators.
- Maintenance kits include replacement filters.

Specifications

	Model HPN2-1100 or UHPN2-1100	Model HPN2-2000
Maximum Nitrogen Flow Rate:	See Flow Table	2 lpm
Nitrogen Purity:	99.9999%	99.99%
Minimum/Maximum Inlet Pressure:	60 psig/125 psig (414/862kPa)	75 psig/120 psig (517/827kPa)
Electrical Requirements[1]:	120 VAC/60 Hz	120 VAC/60 Hz
Dimensions:	35"h x 12"w x 16"d (89cm x 30cm x 41cm)	35"h x 12"w x 16"d (89cm x 30cm x 41cm)
Shipping Weight:	115 lbs. (52 kg)	115 lbs. (52 kg)

Note:
Models HPN2-1100 and HPN2-2000 do not remove hydrocarbons.
[1]Power consumption is:
Model HPN2-1100 = 25 Watts
Model UHPN2-1100 = 700 Watts
Model HPN2-2000 = 25 Watts

Flow Table for Models HPN2-2000, HPN2-1100, and UHPN2-1100

Inlet Air Pressure	Maximum Outlet Flow (cc/min.)	Maximum Outlet Pressure
	Models HPN2-1100 and UHPN2-1100	
125 psig (862kPa)	1100	85 psig (586kPa)
110 psig (758kPa)	1000	75 psig (517kPa)
100 psig (689kPa)	900	65 psig (448kPa)
90 psig (621kPa)	800	60 psig (414kPa)
80 psig (552kPa)	700	50 psig (345kPa)
70 psig (483kPa)	600	45 psig (310kPa)
60 psig (414kPa)	500	35 psig (241kPa)
	Model HPN2-2000	
75-120 psig (517-827kPa)	2000	90 psig (621kPa)

free literature

Nitrogen Generators

Download your free copy from **www.restek.com**

lit. cat.# 580052

ordering note

For **international orders**, please add the appropriate power cord suffix from the table below.

Nitrogen Generators	Model #	qty.	cat.#	price
Nitrogen Generator	HPN2-2000 (high purity)	ea.	21654	
Nitrogen Generator	HPN2-1100 (ultra-high purity)	ea.	21653	
Nitrogen Generator	HPN2-1100 with European Cord Set	ea.	21653-551	
Nitrogen Generator	HPN2-1100 with IEC Connector Only	ea.	21653-552	
Nitrogen Generator	UHPN2-1100 (ultra-high purity zero grade)	ea.	20697	
Maintenance Kits	**Model #**	**qty.**	**cat.#**	**price**
Maintenance Kit	for HPN2-1100, HPN2-2000, 76-96, 76-92	kit	21649	
Maintenance Kit	for UHPN2-1100, 76-94	kit	21655	

International Power Cord Sets

Just add the proper suffix to the catalog number for the gas generator you are ordering.

Select the power cord you need.

Location	qty.	cat.# suffix	price
United Kingdom (230VAC, 50/50Hz)	ea.	-550	
European (230VAC, 50/60Hz)	ea.	-551	
IEC Connector Only (230VAC, 50/60Hz)	ea.	-552	
Japanese (200VAC, 50/60Hz)	ea.	-556	
Japanese for Zero Air (100VAC, 50/60Hz)	ea.	-553	
Japanese for Hydrogen (100VAC, 50/60Hz)	ea.	-554	
Japanese for Nitrogen (100VAC, 50/60Hz)	ea.	-555	

Parker Balston® Nitrogen Gas Generators for LC/MS

- Turn compressed air into ultra-pure nitrogen (up to 99.5%).
- Flows from 1 to 44 lpm.
- Models N2-04, N2-14, N2-22, and N2-35 require no electricity.
- Safe, reliable, low maintenance.
- Maintenance kits include replacement filters.

NEW!


22130

22129

Specifications	NitroFlow Lab	N2-04	N2-14 or N2-14A	N2-22 or N2-22A	N2-35 or N2-35A
Maximum Nitrogen Flow Rate:	32 lpm	8 lpm	78scfh at 95% purity	N2-22: 44 lpm N2-22A: 29 lpm	44 lpm
Nitrogen Purity:	99.50%	99%	95.0%–99.5%	99%	99%
Min/Max Inlet Pressure:	N/A	60 psig/145 psig	60 psig/145 psig	60 psig/145 psig	60 psig/145 psig
Electrical Requirements:	120VAC/60Hz	None	N2-14: None N2-14A: 120VAC/60Hz	N2-22: None N2-22A: 120VAC/60Hz	N2-35: None N2-35A: 120VAC/60Hz
Dimensions:	27.6"h x 35.4"w x 12.2"d (70cm x 90cm x 31cm)	11"h x 13"w x 16"d (27cm x 34cm x 41cm)	50"h x 16"w x 16"d (127cm x 41cm x 41cm)	50"h x 16"w x 16"d (127cm x 41cm x 41cm)	50"h x 16"w x 16"d (127cm x 41cm x 41cm)
Shipping Weight:	205 lbs. (93 kg)	43 lbs. (20 kg)	N2-14: 75 lbs. (34 kg) N2-14A: 80 lbs. (36 kg)	N2-22: 101 lbs. (46 kg) N2-22A: 106 lbs. (48 kg)	N2-35: 115 lbs. (52 kg) N2-35A: 119 lbs. (54 kg)

Nitrogen Generators for LC/MS	Model #	qty.	cat.#	price
Nitrogen Generator for LC/MS	NitroFlow Lab Model, 32 lpm max. flow	ea.	22129	
Nitrogen Generator for LC/MS	N2-04 Model for ELSD, 8 lpm max. flow	ea.	22130	
Nitrogen Generator for LC/MS	N2-14 (general purpose) 78 scfh max. flow at 95% purity	ea.	20677	
Nitrogen Generator for LC/MS	N2-14 with European Power Cord	ea.	20677-551	
Nitrogen Generator for LC/MS	N2-14A (general purpose w/oxygen analyzer) 78 scfh max. flow at 95% purity	ea.	21652	
Nitrogen Generator for LC/MS	N2-22 Model, 44 lpm max. flow	ea.	22131	
Nitrogen Generator for LC/MS	N2-22A Model, 29 lpm max. flow	ea.	22132	
Nitrogen Generator for LC/MS	N2-35 Model, 44 lpm max. flow	ea.	22133	
Nitrogen Generator for LC/MS	N2-35A Model, 44 lpm max. flow	ea.	22134	
Maintenance Kits	**Model #**	**qty.**	**cat.#**	**price**
Maintenance Kit	for N2-14, N2-14A, 75-72, 75-720NA	kit	21648	
Maintenance Kit with Carbon Filter	for N2-14, N2-14A, 75-72, 75-720NA	ea.	22135	

ordering **note**

For **international orders**, please add the appropriate power cord suffix from the table on the previous page.

Parker Filtration

Parker Balston® Zero Air Generators

- Turn in-house compressed air into ultra-pure air (<0.1 ppm total hydrocarbons).
- Remove hydrocarbons to less than 0.1 ppm by catalytic oxidation.
- Operate at 40 to 125 psi (276-862 kPa).
- Typical payback is less than one year, based on cylinder costs.
- Install easily and take up little bench space.
- Maintenance kits include a one year supply of prefilters and final filter.

CE

Model	Number of FIDs*
75-83NA	Up to 3
HPZA-3500	Up to 11
HPZA-7000	Up to 23
HPZA-18000	Up to 60
HPZA-30000	Up to 100

*based on a 300 cc/min. fuel air rate

Specifications

Maximum Zero Air Flow Rate:	75-83NA	1 lpm
	HPZA-3500	3.5 lpm
	HPZA-7000	7 lpm
	HPZA-18000	18 lpm
	HPZA-30000	30 lpm
Outlet Hydrocarbon Concentration (as methane):	75-83NA	< 0.1 ppm
	HPZA-30000	< 0.1 ppm
	Other Models	< .05 ppm
Minimum/Maximum Inlet Air Pressure:	40 psig/125 psig (276/862 kPa)	
Maximum Inlet Hydrocarbon Concentration (as methane):	100 ppm	
Pressure Drop at Maximum Flow Rate:	4 psi (28 kPa) differential	
Maximum Inlet Air Temperature:	78°F (25°C)	
Inlet/Outlet Ports:	1/4" NPT (female)	
Start-up Time to Specified Hydrocarbon Concentration:	45 minutes	
Electrical Requirements:	75-83NA	120 VAC/60 Hz, 0.5 amps
	Other Models	120 VAC/60 Hz, 3.5 amps
Dimensions:	75-83NA	12"h x 10"w x 3"d (30 cm x 25 cm x 8 cm)
	Other Models	16"h x 11"w x 13"d (42 cm x 27 cm x 3 cm)
Shipping Weight:	75-83NA	7 lbs. (3 kg)
	Other Models	41 lbs. (19 kg)

Zero Air Generator	Model #	Capacity	qty.	cat. #	price
Zero Air Generator	75-83NA	1000cc/min.	ea.	20684	
Zero Air Generator	75-83NA with United Kingdom Power Cord	1000cc/min.	ea.	20684-550	
Zero Air Generator	HPZA-3500	3500cc/min.	ea.	20680	
Zero Air Generator	HPZA-3500 with European Power Cord	3500cc/min.	ea.	20680-551	
Zero Air Generator	HPZA-7000	7000cc/min.	ea.	20681	
Zero Air Generator	HPZA-18000	18,000cc/min.	ea.	20682	
Zero Air Generator	HPZA-30000	30,000cc/min.	ea.	20683	
Maintenance Kits (includes a one-year supply of prefilters and final filter)			**qty.**	**cat. #**	**price**
Maintenance Kit	for 75-83NA		kit	21646	
Maintenance Kit	for HPZA-3500, HPZA-7000, HPZA-18000, HPZA-30000		kit	21647	
Replacement Catalyst Towers	**Model #**	**Capacity**	**qty.**	**cat. #**	**price**
Replacement Catalyst Tower	for 75-83NA	1000cc/min.	ea.	22005	
Replacement Catalyst Tower	for HPZA-3500	3500cc/min.	ea.	22004	
Replacement Catalyst Tower	for HPZA-7000	7000cc/min.	ea.	22006	
Replacement Catalyst Tower	for HPZA-18000	18,000cc/min.	ea.	22007	
Replacement Catalyst Tower	for HPZA-30000	30,000cc/min.	ea.	22008	

ordering **note**

For **international orders**, please add the appropriate power cord suffix from the table below.

free literature

Zero Air Generators

Download your free copy from **www.restek.com**

lit. cat.# 580050

International Power Cord Sets

Just add the proper suffix to the catalog number for the gas generator you are ordering.

Location	qty.	cat.# suffix	price
United Kingdom (230VAC, 50/50Hz)	ea.	-550	
European (230VAC, 50/60Hz)	ea.	-551	
IEC Connector Only (230VAC, 50/60Hz)	ea.	-552	
Japanese (200VAC, 50/60Hz)	ea.	-556	
Japanese for Zero Air (100VAC, 50/60Hz)	ea.	-553	
Japanese for Hydrogen (100VAC, 50/60Hz)	ea.	-554	
Japanese for Nitrogen (100VAC, 50/60Hz)	ea.	-555	

Silcosteel® Regulators

NEW!

Single and dual stage regulators are now available with Silcosteel® surface treatment. This proprietary passivation process, developed by SilcoTek™, provides excellent inertness for sulfur and mercury calibration standards and improved corrosion resistance over bare 316L stainless steel or other more expensive alloys.

Silcosteel® treated sampling and transfer systems allow oil and gas exploration, chemical and petrochemical plants, and refineries to obtain accurate sulfur and mercury data the first time, every time, with no delay, sample errors, or false readings, down to part-per-billion (ppb) levels. Analysts charged with monitoring sulfur and mercury levels in process streams can save thousands of dollars in improved yields, better test cycle times, and improved system reliability.

Applications:
- CEM Continuous Emission Monitoring
- Environmental Stack and Gas Emission Standards
- Low level sulfur and mercury analysis
- Reactive or corrosive gases
- Off-shore platform systems
- Corrosive and salt water exposure

Outlet pressure:	0 to 100 psig
Outlet gauge:	30" – 0 to 200 psig
Inlet gauge:	0 to 4000 psig
Outlet assembly:	diaphragm valve, 1/4" tube fitting

Description	qty.	cat.#	price
Single-Stage Regulator			
CGA 330 (H_2S and other reduced sulfurs)	ea.	21361-5	
CGA 350 (H_2, P_3)	ea.	21361-6	
CGA 660 (NO, NO_2, SO_2)	ea.	21361-11	
Dual-Stage Regulator			
CGA 330 (H_2S and other reduced sulfurs)	ea.	21360-2	
CGA 350 (H_2, P_3)	ea.	21360-7	
CGA 660 (NO, NO_2, SO_2)	ea.	21360-12	

For other CGA fittings, please contact your local Restek representative.

also available

Regulators for use with gas standards.

See **pages 433-434**.

Overview of Restek's Ultra-High Purity (UHP) Gas Regulators

- Regulators feature metal-to-metal seals throughout for long-term leak-tightness.
- Metal diaphragm outlet valve ensures gas purity.
- Each regulator is helium leak-test-certifiable to $1x10^{-8}$ scc/sec.
- Temperature range: -40 °C to 60 °C

Ultra-High Purity (UHP) Brass Body Gas Regulators

UHP brass regulators are the best choice when using ultra-high purity carrier gas for sensitive GC applications using MS, PID, or ECD detection methods. They feature reduced internal dead-volume, relative to stainless steel bodies. The metal valve diaphragm ensures leak-free shut-off. Oxidation-resistant chrome plating maintains a like-new appearance.

Dual-Stage Ultra-High Purity Chrome-Plated Brass Gas Regulators

- Oxidation-resistant, chrome-plated.
- Most stable outlet pressure control.
- Secondary pressure regulation not needed.
- Most widely used regulator.
- Less internal volume than stainless steel gas regulators.

Inlet gauge: 0 to 4,000psig (0-27,579kPa)
Outlet assembly: diaphragm valve, 1/4" tube fitting

Fitting	Outlet Pressure	Outlet Gauge	qty.	cat.#	price
CGA 580 (N_2 He, Ar)	0 to 100psig (0-689kPa)	30" – 0 to 200psig (0-1379kPa)	ea.	21667	
CGA 350 (H_2, P_5)	0 to 100psig (0-689kPa)	30" – 0 to 200psig (0-1379kPa)	ea.	21668	
CGA 590 (Air)	0 to 100psig (0-689kPa)	30" – 0 to 200psig (0-1379kPa)	ea.	21669	

Single-Stage Ultra-High Purity Chrome-Plated Brass Gas Regulators

- Oxidation-resistant, chrome-plated.
- Use when there is secondary pressure regulation downstream.
- Identical gas purity protection as with dual-stage gas regulators.

Inlet gauge: 0 to 4,000psig (0-27,579kPa)
Outlet assembly: diaphragm valve, 1/4" tube fitting

Fitting	Outlet Pressure	Outlet Gauge	qty.	cat.#	price
CGA 580 (N_2, He, Ar)	0 to 100psig (0-689kPa)	30" – 0 to 200psig (0-1379kPa)	ea.	20646	
CGA 350 (H_2, P_5)	0 to 100psig (0-689kPa)	30" – 0 to 200psig (0-1379kPa)	ea.	20647	
CGA 590 (Air)	0 to 100psig (0-689kPa)	30" – 0 to 200psig (0-1379kPa)	ea.	20648	

Ultra-High Purity Chrome-Plated Brass Line Gas Regulator

- Oxidation-resistant, chrome-plated.
- Use where you need to reduce the line pressure by 20 psig (138 kPa) or more.
- Same purity protection as high-pressure cylinder regulators.

Inlet connections: 1/4" FPT
Outlet assembly: 1/4" FPT port

Fitting	Outlet Pressure	Outlet Gauge	qty.	cat.#	price
1/4" female NPT ports*	0-50psig (0-345kPa)	30" - 0 to 100psig (0-689kPa)	ea.	21666	
1/4" female NPT ports*	0-100psig (0-689kPa)	30" - 0 to 200psig (0-1379kPa)	ea.	22452	

*Order appropriate male connector, pipe-to-tube fittings.

Swagelok® Male Connector, Pipe-to-Tube Fittings

23134

23179

Fitting Type	Size (inches)	Similar to Swagelok	Brass qty.	Brass cat.#	Brass price	Stainless Steel qty.	Stainless Steel cat.#	Stainless Steel price
Male Connector	1/4" to 1/4" NPT	400-1-4	10-pk.	23134	$44	2-pk.	23184	
Male Connector	1/8" to 1/4" NPT	200-1-4	10-pk.	23136	$50	2-pk.	23186	
Tube End Reducer	1/4" to 1/8"	200-R-4	5-pk.	23129	$29	2-pk.	23179	

Ultra-High Purity (UHP) Stainless Steel Body Gas Regulators

UHP stainless steel regulators are the standard for ultra-high-purity and corrosion-resistant pressure regulation. They are more easily purged of atmospheric components, compared to brass gas regulators, making them ideal for the most demanding applications. Stainless steel is especially useful in atmospheres of dry corrosive gases such as hydrogen.

Dual-Stage Ultra-High Purity Stainless Steel Gas Regulators

- Most stable outlet pressure control.
- Secondary pressure regulation not needed.

Inlet gauge: 0 to 4,000psig (0-27,579kPa)
Outlet assembly: diaphragm valve, 1/4" tube fitting

Fitting	Outlet Pressure	Outlet Gauge	qty.	cat.#	price
CGA 580 (N_2, He, Ar)	0 to 100psig (0-689kPa)	30" – 0 to 200psig (0-1379kPa)	ea.	20662	
CGA 350 (H_2, P_5)	0 to 100psig (0-689kPa)	30" – 0 to 200psig (0-1379kPa)	ea.	20663	
CGA 590 (Air)	0 to 100psig (0-689kPa)	30" – 0 to 200psig (0-1379kPa)	ea.	20664	

Single-Stage Ultra-High Purity Stainless Steel Gas Regulators

- Use when there is secondary pressure regulation downstream.
- Identical gas purity protection as with dual-stage gas regulators.

Inlet gauge: 0 to 4,000psig (0-27,579kPa)
Outlet assembly: diaphragm valve, 1/4" tube fitting

Fitting	Outlet Pressure	Outlet Gauge	qty.	cat.#	price
CGA 580 (N_2, He, Ar)	0 to 100psig (0-689kPa)	30" – 0 to 200psig (0-1379kPa)	ea.	20665	
CGA 350 (H_2, P_5)	0 to 100psig (0-689kPa)	30" – 0 to 200psig (0-1379kPa)	ea.	20666	
CGA 590 (Air)	0 to 100psig (0-689kPa)	30" – 0 to 200psig (0-1379kPa)	ea.	20667	

Flexible Stainless Steel Hoses

Description	Length	Fittings	qty.	cat. #	price
Flexible Stainless Steel Hose	36"	1/4" Female NPT	ea.	21339	
Flexible Stainless Steel Hose	18"	1/4" Female NPT	ea.	21340	
Flexible Stainless Steel Hose	36"	Stainless Steel CGA 580	ea.	21344	

Flammable Gas Flash Arrestor—Factory Mutual Approved*

- Gas flow shuts off in the event of a flashback.
- Flame extinguished—flame front prevented from reaching the gas supply.
- No gas flow restriction under normal operating conditions.

Description	qty.	cat.#	price
Flammable Gas Flash Arrestor, Brass Body	ea.	21334	

*Approved for brass body servicing hydrogen, acetylene, propane, or natural gas only.

CGA Fittings

CGA-specified nuts and nipples with internal frit, 1/4-inch NPT nickel-plated brass.

Description	qty.	cat.#	price
CGA 580 Fitting, (N_2, He, Ar)	ea.	21336	
CGA 350 Fitting, (H_2, P_5)	ea.	21337	
CGA 590 Fitting, (Air)	ea.	21338	

ordering **note**

International Fittings

All gas regulators are available with the following BS (British Standard) and DIN (German Industrial Standards Organization) connections. Please contact your local Restek representative for more information.

BS 341 #01	BS 341 #08	BS 341 #15	DIN 477 #06	DIN 477 #10	DIN 477 #14
BS 341 #02	BS 341 #10	DIN 477 #01	DIN 477 #07	DIN 477 #11	DIN 477 #15
BS 341 #03	BS 341 #13	DIN 477 #03	DIN 477 #08	DIN 477 #12	
BS 341 #04	BS 341 #14	DIN 477 #05	DIN 477 #09	DIN 477 #13	

Critical Purity Automatic Switchover System for Noncorrosive Gases


20668580

High-purity automatic switchover systems provide a continuous supply of high purity gas to the laboratory, process, or instrument, to allow you to replace a depleted gas source without interruption in the gas supply. Continuous gas supply is achieved by setting the two regulators at slightly different pressures and discharging one side of the system at a time. These models include flexible, all-stainless-steel pigtails with armor casing. The CGA connection on each pigtail has a check valve in the gland to prevent contamination and minimize purging requirements.

Switching pressure:	200psig/170psig (1379/1172kPa)
Inlet connections:	flexible SS pigtails (36")
Line regulator:	0 to 100psig (0-689kPa)

Brass Automatic Switchover System with Line Regulator	qty.	cat.#	price
CGA 580 (N_2, He, Ar)	ea.	20668580	
CGA 350 (H_2, P_5)	ea.	20668350	
CGA 590 (Air)	ea.	20668590	
Stainless Steel Automatic Switchover System with Line Regulator	**qty.**	**cat.#**	**price**
CGA 580 (N_2, He, Ar)	ea.	21593580	

Protocol Station


21347

The protocol station is designed for convenient wall mounting of high-purity gas regulators. Wall mounting provides ease of use, prevents gas regulator damage, and improves safety. Either chrome-plated brass or 316 stainless steel option is complete with a 3-foot, flexible, all-stainless-steel pigtail with armor casing. The CGA connection on the pigtail has an integral check valve in the gland to prevent contamination during cylinder changeout.

Chrome-Plated Brass Protocol Station*	qty.	cat.#	price
CGA 580 (N_2, He, Ar)	ea.	21347	
CGA 350 (H_2, P_5)	ea.	21348	
CGA 590 (Air)	ea.	21349	
Stainless Steel Protocol Station*	**qty.**	**cat.#**	**price**
CGA 580 (N_2, He, Ar)	ea.	21327	

*Pressure regulator not included. Order separately.


21321

Cylinder Valve Wrench

This specially-designed wrench enables easy opening of cylinder valves that are fitted with a hand wheel. It is also suitable for removing difficult cylinder caps.

Description	qty.	cat.#	price
Cylinder Valve Wrench	ea.	21321	


21322

Universal Cylinder Wrench

Use this versatile wrench for tightening gauges and gas regulator CGA fittings to cylinder outlets and pipe thread connections.

Description	qty.	cat.#	price
Universal Cylinder Wrench	ea.	21322	


20635

Backpressure Gas Regulator

Capillary GC inlet systems have backpressure regulators to maintain a constant upstream pressure and rapidly respond to catastrophic leaks. The 0–60 psig (0-414 kPa) operating range is sufficient to operate a 105 m, 0.25 mm ID column at its optimum flow rate.

Description	qty.	cat.#	price
Backpressure Gas Regulator	ea.	20635	

MINICYL Regulator


20610

This compact general purpose regulator has many laboratory applications including air-drying glassware, sparging or evaporating solutions, and controlling pneumatic valves. It is constructed of lightweight aluminum with an elastomer diaphragm. Includes a 0–60 psig (0-414 kPa) gauge and either $^1/_8$- or $^1/_4$-inch tube fittings.

Description	Fittings	qty.	cat.#	price
MINICYL Regulator	$^1/_8$" Fittings	ea.	20610	
MINICYL Regulator	$^1/_4$" Fittings	ea.	20611	

Cylinder Holders, Wall Mounted

Prevent serious injuries! These holders are designed to prevent free-standing gas cylinders from tipping over and injuring personnel. The cast aluminum holder can be secured to a wall or the side of a work bench. Each mount will secure a cylinder 4-15 inches in diameter.

Description	Size	qty.	cat.#	price
Cylinder Holder, Wall Mounted	Single	ea.	21333	
Cylinder Holder, Wall Mounted	Double	ea.	23400	
Cylinder Holder, Wall Mounted	Triple	ea.	23401	
Cylinder Holder, Wall Mounted	Four	ea.	23402	

Swagelok® Fitting Kits (Brass & Stainless Steel)

Save more than 40% by purchasing a new Restek Swagelok® Fittings Kit, compared to prices for the individual parts!

- Includes the most common assortment of 1/8" and 1/4" brass or stainless steel fittings.
- Parts list makes reordering easy.
- Parts come in sturdy tool box for easy and convenient storage.

40% savings

Swagelok #, Description, qty included in kit

B-202-1	1/8" brass nut (20)
B-402-1	1/4" brass nut (20)
B-203-1	1/8" brass front ferrule (20)
B-403-1	1/4" brass front ferrule (20)
B-204-1	1/8" brass back ferrule (20)
B-404-1	1/4" brass back ferrule (20)
B-200-C	1/8" brass cap (6)
B-400-C	1/4" brass cap (6)
B-200-P	1/8" brass plug (6)
B-400-P	1/4" brass plug (6)
B-200-6	1/8" brass union (2)
B-400-6	1/4" brass union (2)
B-400-6-2	1/4" to 1/8" brass reducing union (2)
B-200-3	1/8" brass tee (2)
B-400-3	1/4" brass tee (2)
B-400-R-2	1/8" to 1/4" brass tube end reducer (2)
B-200-R-4	1/4" to 1/8" brass tube end reducer (2)
MS-IG-200	1/8" inspection gauge (1)
MS-IG-400	1/4" inspection gauge (1)

Description	qty.	cat.#	price
Swagelok Fitting Kit, Brass	kit	23141	

Swagelok #, Description, qty included in kit

SS-202-1	1/8" SS nut (20)
SS-402-1	1/4" SS nut (20)
SS-203-1	1/8" SS front ferrule (20)
SS-403-1	1/4" SS front ferrule (20)
SS-204-1	1/8" SS back ferrule (20)
SS-404-1	1/4" SS back ferrule (20)
SS-200-C	1/8" SS cap (6)
SS-400-C	1/4" SS cap (6)
SS-200-P	1/8" SS plug (6)
SS-400-P	1/4" SS plug (6)
SS-200-6	1/8" SS union (2)
SS-400-6	1/4" SS union (2)
SS-400-6-2	1/4" to 1/8" SS reducing union (2)
SS-200-3	1/8" SS tee (2)
SS-400-3	1/4" SS tee (2)
SS-400-R-2	1/8" to 1/4" SS tube end reducer (2)
SS-200-R-4	1/4" to 1/8" SS tube end reducer (2)
MS-IG-200	1/8" inspection gauge (1)
MS-IG-400	1/4" inspection gauge (1)

Description	qty.	cat.#	price
Swagelok Fitting Kit, Stainless Steel	kit	23197	

Swagelok® Fittings (Brass & Stainless Steel)

Restek is pleased to offer one of the premier lines of fittings available for chromatographers in the market today. We can supply the entire line of Swagelok® fittings. If you don't see the exact product you're looking for, please call us for a quote.


nut


front ferrule


back ferrule


nut & ferrule set


plug


union


reducing union


tee


cross


tube end reducer


port connector


male connector


female connector


male quick coupling


female quick coupling

Fitting Type	Size	Swagelok #	Brass qty.	Brass cat.#	Brass price	316 Grade Stainless Steel qty.	316 Grade Stainless Steel cat.#	316 Grade Stainless Steel price
Nut	1/16"	102-1	20-pk.	23100		5-pk.	23150	
	1/8"	202-1	40-pk.	23101		10-pk.	23151	
	1/4"	402-1	40-pk.	23102		10-pk.	23152	
Front Ferrule	1/16"	103-1	20-pk.	23103		10-pk.	23153	
	1/8"	203-1	40-pk.	23104		20-pk.	23154	
	1/4"	403-1	40-pk.	23105		20-pk.	23155	
Back Ferrule	1/16"	104-1	20-pk.	23106		10-pk.	23156	
	1/8"	204-1	40-pk.	23107		20-pk.	23157	
	1/4"	404-1	40-pk.	23108		20-pk.	23158	
Nut & Ferrule Set	1/16"		10-pk.	23109		2-pk.	23159	
	1/8"		20-pk.	23110		5-pk.	23160	
	1/4"		20-pk.	23111		5-pk.	23161	
Plug	1/16"	100-P	5-pk.	23112		2-pk.	23162	
	1/8"	200-P	10-pk.	23113		4-pk.	23163	
	1/4"	400-P	10-pk.	23114		4-pk.	23164	
Union	1/16"	100-6	3-pk.	23115		ea.	23165	
	1/8"	200-6	5-pk.	23116		2-pk.	23166	
	1/4"	400-6	5-pk.	23117		2-pk.	23167	
Reducing Union	1/8" to 1/16"	200-6-1	5-pk.	23118		ea.	23168	
	1/4" to 1/16"	400-6-1	5-pk.	23119		2-pk.	23169	
	1/4" to 1/8"	400-6-2	5-pk.	23120		2-pk.	23170	
Tee	1/16"	100-3	2-pk.	23121		ea.	23171	
	1/8"	200-3	2-pk.	23122		ea.	23172	
	1/4"	400-3	2-pk.	23123		ea.	23173	
Cross	1/8"	200-4	2-pk.	23124		ea.	23174	
	1/4"	400-4	2-pk.	23125		ea.	23175	
Tube End Reducer	1/8" to 1/16"	100-R-2	5-pk.	23126		2-pk.	23176	
	1/4" to 1/16"	100-R-4	5-pk.	23127		2-pk.	23177	
	1/8" to 1/4"	400-R-2	5-pk.	23128		2-pk.	23178	
	1/4" to 1/8"	200-R-4	5-pk.	23129		2-pk.	23179	
Port Connector	1/8"	201-PC	5-pk.	23130		2-pk.	23180	
	1/4"	401-PC	10-pk.	23131		2-pk.	23181	
	1/8" to 1/4"	401-PC-2	5-pk.	23132		2-pk.	23182	
Male Connector	1/8" to 1/8" NPT	200-1-2	10-pk.	23133		2-pk.	23183	
	1/4" to 1/4" NPT	400-1-4	10-pk.	23134		2-pk.	23184	
	1/16" to 1/8" NPT	100-1-2	5-pk.	23135		2-pk.	23185	
	1/8" to 1/4" NPT	200-1-4	10-pk.	23136		2-pk.	23186	
	1/4" to 1/8" NPT	400-1-2	10-pk.	23137		2-pk.	23187	
Female Connector	1/8" to 1/8" NPT	200-7-2	5-pk.	23138		2-pk.	23188	
	1/4" to 1/4" NPT	400-7-4	5-pk.	23139		2-pk.	23189	
	1/4" to 1/8" NPT	400-7-2	5-pk.	23140		2-pk.	23190	
Male & Female Quick Couplings	1/8" male*	QC4D-200	—	—		ea.	23191	
	1/8" male	QC4S-200	—	—		ea.	23192	
	1/8" female*	QC4B-200	—	—		ea.	23193	
	1/4" male*	QC4D-400	—	—		ea.	23194	
	1/4" male	QC4S-400	—	—		ea.	23195	
	1/4" female*	QC4B-400	—	—		ea.	23196	

*Includes self-sealing shut-off valve.

also **available**

Restek also carries specialized tools for Swagelok® fittings.
See **page 325**.

Swagelok® Fittings (Siltek®/Sulfinert® & Silcosteel®-CR Treated)

- Full line of treated 1/16", 1/8", and 1/4" fittings.
- Silcosteel®-CR treatment enhances corrosion resistance by 10x, or more.
- Custom treatment available for any Swagelok® fitting, or other system parts not listed here (call for details).
- Description of custom Restek coatings listed below.

			Siltek/Sulfinert Treated			Silcosteel-CR Treated		
Fitting Type	Size	Swagelok #	qty.	cat.#	price	qty.	cat.#	price
Union	1/16"	SS-100-6	ea.	22540		ea.	22575	
	1/8"	SS-200-6	ea.	22541		ea.	22576	
	1/4"	SS-400-6	ea.	22542		ea.	22577	
	3/8"	SS-600-6	ea.	22909		ea.	22904	
Tee	1/16"	SS-100-3	ea.	22543		ea.	22578	
	1/8"	SS-200-3	ea.	22544		ea.	22579	
	1/4"	SS-400-3	ea.	22545		ea.	22580	
	3/8"	SS-600-3	ea.	22910		ea.	22905	
Reducing Union	1/8" to 1/16"	SS-200-6-1	ea.	22546		ea.	22581	
	1/4" to 1/16"	SS-400-6-1	ea.	22547		ea.	22582	
	1/4" to 1/8"	SS-400-6-2	ea.	22548		ea.	22583	
	3/8" to 1/4"	SS-600-6-4	ea.	22911		ea.	22906	
Elbow	1/8"	SS-200-9	ea.	22549		ea.	22584	
	1/4"	SS-400-9	ea.	22550		ea.	22585	
Plug	1/8"	SS-200-P	ea.	22573		ea.	22620	
	1/4"	SS-400-P	ea.	22574		ea.	22597	
Cross	1/8"	SS-200-4	ea.	22551		ea.	22586	
	1/4"	SS-400-4	ea.	22552		ea.	22587	
Tube End Reducer	1/8" tube to 1/16"	SS-100-R-2	ea.	22553		ea.	22588	
	1/4" tube to 1/16"	SS-100-R-4	ea.	22554		ea.	22589	
	1/8" tube to 1/4"	SS-400-R-2	ea.	22555		ea.	22590	
	1/4" tube to 1/8"	SS-200-R-4	ea.	22556		ea.	22591	
Port Connector	1/8"	SS-201-PC	ea.	22557		ea.	22592	
	1/4"	SS-401-PC	ea.	22558		ea.	22593	
	1/8" tube to 1/4"	SS-401-PC-2	ea.	22559		ea.	22594	
Male Connector	1/8" to 1/8" NPT	SS-200-1-2	ea.	22561		ea.	22595	
	1/4" to 1/4" NPT	SS-400-1-4	ea.	22562		ea.	22596	
	1/16" to 1/8" NPT	SS-100-1-2	ea.	22563		ea.	22610	
	1/8" to 1/4" NPT	SS-200-1-4	ea.	22564		ea.	22611	
	1/4" to 1/8" NPT	SS-400-1-2	ea.	22565		ea.	22612	
	3/8" to 3/8" NPT	SS-600-1-6	ea.	22912		ea.	22907	
Female Connector	1/8" to 1/8" NPT	SS-200-7-2	ea.	22566		ea.	22613	
	1/4" to 1/4" NPT	SS-400-7-4	ea.	22567		ea.	22614	
	1/4" to 1/8" NPT	SS-400-7-2	ea.	22568		ea.	22615	
	1/8" to 1/4" NPT	SS-200-7-4	ea.	22569		ea.	22616	
Bulkhead Union	1/8"	SS-200-61	ea.	22570		ea.	22617	
	1/4"	SS-400-61	ea.	22571	$68	ea.	22618	


union


tee


reducing union


elbow


plug


cross


tube end reducer


port connector


male connector


female connector


bulkhead union

Custom Restek Coatings

- **Siltek®**—The ultimate passivation of treated surfaces, from glass to high nickel alloys of steel; ideal for sulfurs, automotive exhaust testing, or stack gas sampling.
- **Sulfinert®**—A required treatment for metal components when analyzing for parts-per-billion levels of organo-sulfur compounds.
- **Silcosteel®-CR**—A corrosion resistant layer that increases the lifetime of system components in acidic environments containing hydrochloric acid, nitric acid, or seawater.

For more information on our custom coatings, see page 318.


nut


front ferrule


back ferrule


nut & ferrule set


plug


union


reducing union


tee


cross

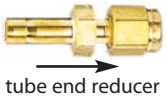
tube end reducer


port connector


male connector


female connector


male & female quick couplings

Parker® Fittings (Brass & Stainless Steel)

Parker's (A-Lok®) two-piece ferrules and NPT fittings are ideal for installing new equipment, modifying existing instrumentation, or replacing worn connections. Restek offers both brass and stainless steel fittings. If there is a particular Parker® fitting that you are looking for and it is not listed here, please contact us to inquire about availability.

			Brass			316 Grade Stainless Steel		
Fitting Type	Size	Parker #	qty.	cat.#	price	qty.	cat.#	price
Nut	1/16"	1 Nu 1	20-pk.	21800		5-pk.	21900	
	1/8"	2 Nu 2	40-pk.	21801		10-pk.	21901	
	1/4"	4 Nu 4	40-pk.	21802		10-pk.	21902	
Front Ferrule	1/16"	1 FF 1	20-pk.	21803		10-pk.	21903	
	1/8"	2 FF 2	40-pk.	21804		20-pk.	21904	
	1/4"	4 FF 4	40-pk.	21805		20-pk.	21905	
Back Ferrule	1/16"	1 BF 1	20-pk.	21806		10-pk.	21906	
	1/8"	2 BF 2	40-pk.	21807		20-pk.	21907	
	1/4"	4 BF 4	40-pk.	21808		20-pk.	21908	
Nut & Ferrule Set	1/16"	—	10-pk.	21809		2-pk.	21909	
	1/8"	—	20-pk.	21810		5-pk.	21910	
	1/4"	—	20-pk.	21811		5-pk.	21911	
Plug	1/16"	1 BLP 1	5-pk.	21815		2-pk.	21915	
	1/8"	2 BLP 2	10-pk.	21816		4-pk.	21916	
	1/4"	4 BLP 4	10-pk.	21817		4-pk.	21917	
Union	1/16"	1 SC 1	3-pk.	21818		ea.	21918	
	1/8"	2 SC 2	5-pk.	21819		2-pk.	21919	
	1/4"	4 SC 4	5-pk.	21820		2-pk.	21920	
Reducing Union	1/8" to 1/16"	2 RU 1	5-pk.	21823		ea.	21923	
	1/4" to 1/16"	4 RU 1	5-pk.	21824		2-pk.	21924	
	1/4" to 1/8"	4 RU 2	5-pk.	21825		2-pk.	21925	
Tee	1/16"	1 ET 1	2-pk.	21826		ea.	21926	
	1/8"	2 ET 2	2-pk.	21827		ea.	21927	
	1/4"	4 ET 4	2-pk.	21828		ea.	21928	
Cross	1/8"	2 ECR 2	2-pk.	21829		ea.	21929	
	1/4"	4 ECR 4	2-pk.	21830		ea.	21930	
Tube End Reducer	1/8" tube to 1/16"	2 TUR 1	5-pk.	21831		2-pk.	21931	
	1/4" tube to 1/16"	4 TUR 1	5-pk.	21832		2-pk.	21932	
	1/8" tube to 1/4"	2 TUR 4	5-pk.	21833		2-pk.	21933	
	1/4" tube to 1/8"	4 TUR 2	5-pk.	21834		2-pk.	21934	
Port Connector	1/8"	2 PC 2	5-pk.	21835		2-pk.	21935	
	1/4"	4 PC 4	10-pk.	21836		2-pk.	21936	
	1/8" tube to 1/4"	2 PC 4	5-pk.	21837		2-pk.	21937	
Male Connector	1/8" to 1/8" NPT	2 MSC 2N	10-pk.	21841		2-pk.	21941	
	1/4" to 1/4" NPT	4 MSC 4N	10-pk.	21842		2-pk.	21942	
	1/16" to 1/8" NPT	1 MSC 2N	5-pk.	21843		2-pk.	21943	
	1/8" to 1/4" NPT	2 MSC 4N	10-pk.	21844		2-pk.	21944	
	1/4" to 1/8" NPT	4 MSC 2N	10-pk.	21845		2-pk.	21945	
Female Connector	1/8" to 1/8" NPT	2 FSC 2N	5-pk.	21846		2-pk.	21946	
	1/4" to 1/4" NPT	4 FSC 4N	5-pk.	21847		2-pk.	21947	
	1/4" to 1/8" NPT	4 FSC 2N	5-pk.	21848		2-pk.	21948	
Male & Female Quick Couplings	1/8" male*	2A-Q4VN	—	—		ea.	21957	
	1/8" male	2A-Q4P	—	—		ea.	21958	
	1/8" female*	2A-Q4CN	—	—		ea.	21959	
	1/4" male*	4A-Q4VN	—	—		ea.	21960	
	1/4" male	4A-Q4P	—	—		ea.	21961	
	1/4" female*	4A-Q4CN	—	—	—	ea.	21962	

*Includes self-sealing shut-off valve.

Parker® Fittings (Siltek®/Sulfinert® Treated & Silcosteel®-CR Treated)

A broad line of 1/16", 1/8" and 1/4" fittings are available with Siltek®/Sulfinert® or Silcosteel®-CR treatment. Because of expanding applications for these coatings, we have received many requests for a broader product offering. If you do not see everything you need, contact us for information on custom coating services.

			Siltek/Sulfinert Treated			Silcosteel-CR Treated		
Fitting Type	Size	Parker #	qty.	cat.#	price	qty.	cat.#	price
Union	1/16"	1 SC 1	ea.	22520		ea.	22863	
	1/8"	2 SC 2	ea.	22521		ea.	22864	
	1/4"	4 SC 4	ea.	22522		ea.	22865	
Tee	1/16"	1 ET 1	ea.	22526		ea.	22866	
	1/8"	2 ET 2	ea.	22527		ea.	22867	
	1/4"	4 ET 4	ea.	22528		ea.	22868	
Reducing Union	1/8" to 1/16"	2 RU 1	ea.	22523		ea.	22869	
	1/4" to 1/16"	4 RU 1	ea.	22524		ea.	22870	
	1/4" to 1/8"	4 RU 2	ea.	22525		ea.	22871	
Elbow	1/8"	2 EE 2	ea.	22530		ea.	22875	
	1/4"	4 EE 4	ea.	22531		ea.	22876	
Plug	1/8"	2 BLP 2	ea.	21540		ea.	22878	
	1/4"	4 BLP 4	ea.	21541		ea.	22879	
Cross	1/8"	2 ECR 2	ea.	21542		ea.	22872	
	1/4"	4 ECR 4	ea.	21543		ea.	22873	
Tube End Reducer	1/8" tube to 1/16"	2 TUR 1	ea.	21544		ea.	22880	
	1/4" tube to 1/16"	4 TUR 1	ea.	21545		ea.	22881	
	1/8" tube to 1/4"	2 TUR 4	ea.	21546		ea.	22882	
	1/4" tube to 1/8"	4 TUR 2	ea.	21547		ea.	22883	
Port Connector	1/8"	2 PC 2	ea.	21548		ea.	22884	
	1/4"	4 PC 4	ea.	21549		ea.	22885	
	1/8" tube to 1/4"	2 PC 4	ea.	21550		ea.	22886	
Male Connector	1/8" to 1/8" NPT	2 MSC 2N	ea.	21551		ea.	22887	
	1/4" to 1/4" NPT	4 MSC 4N	ea.	21552		—	—	
	1/16" to 1/8" NPT	1 MSC 2N	ea.	21553		ea.	22889	
	1/8" to 1/4" NPT	2 MSC 4N	ea.	21554		ea.	22890	
	1/4" to 1/8" NPT	4 MSC 2N	ea.	21555		ea.	22891	
Female Connector	1/8" to 1/8" NPT	2 FSC 2N	ea.	21556		ea.	22892	
	1/4" to 1/4" NPT	4 FSC 4N	ea.	21557		ea.	22893	
	1/4" to 1/8" NPT	4 FSC 2N	ea.	21558		ea.	22894	
	1/8" to 1/4" NPT	2 FSC 4N	ea.	21559		—	—	
Plug Valve, 2-Way	1/8"	2A PR4 VT SS	ea.	21586		—	—	
	1/4"	4A PR4 VT SS	ea.	21587		—	—	
Ball Valve, 2-Way	1/8"	2A B2LJ2 SSP	ea.	21588		—	—	
	1/4"	4A B2LJ2 SSP	ea.	21589		—	—	

Please note: Nuts and ferrules are not treated unless requested (custom parts). Nuts and ferrules normally are not in contact with sample pathway, and thus do not require coating.

Ball and plug valves are also available in brass and stainless steel. See **page 322**.


union


tee


reducing union


elbow


plug


cross


tube end reducer


port connector

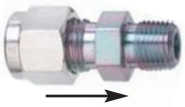
male connector


female connector


plug valve, 2-way


ball valve, 2-way

Valco® Fittings (Siltek®/Sulfinert® Treated)

		Siltek/Sulfinert Treated		
Fitting Type	Size	qty.	cat.#	price
Zero Dead Volume Tee	1/16"	ea.	22534	
	1/8"	ea.	22535	
Zero Dead Volume Union	1/16"	ea.	22532	
	1/8"	ea.	22533	


zero dead volume tee


zero dead volume union

Tubing and Available Coatings

Restek sets the standard in tubing for analytical and process applications. Complete your system with precleaned or treated tubing and treated fittings and valves for an inert, corrosion-resistant pathway.

Available tubing coatings include:

- **Siltek®**—The ultimate passivation of treated surfaces, from glass to high nickel alloys of steel; ideal for sulfurs, automotive exhaust testing or stack gas sampling.
- **Silcosteel®-CR**—A corrosion resistant layer that increases the lifetime of system components in acidic environments containing hydrochloric acid, nitric acid, or seawater.
- **Sulfinert®**—A required treatment for metal components when analyzing for parts-per-billion levels of organo-sulfur compounds.

Frequently Asked Questions

1. Can treated tubing be bent?
Treated tubing can be bent into curves with a bend radius greater than 1 inch for 1/16-inch OD tubing, 2 inches for 1/8-inch OD tubing, or 4 inches for 1/4-inch OD tubing. The treatment layer will remain intact as long as the tubing isn't stretched dramatically. If tight bends are necessary, use a treated elbow union or bend untreated tubing and send it to Restek for custom treatment.

2. Can compression fittings be used without crushing the treatment layer?
Yes. The layer is thin and permeates the surface. It compresses with minimal damage.

3. Is welding possible after treatment?
Yes. The coating does not interfere with the welding of two coated components. The coating is lost at the weld and in the heat affected zones approximately 2 to 5 mm on either side of the weld.

4. Is any additional chemical deactivation necessary?
A Sulfinert® or Silcosteel® layer leaves few exposed active sites, so there usually is no need for additional treatment. Chemical deactivation is useful in chromatographic applications in which water will be vaporized on the Silcosteel® treated surface, but is not necessary for Sulfinert® treated surfaces. Parts used in high-temperature applications (>400 °C) cannot be chemically deactivated.

5. What are the temperature constraints of these surface treatments?
On stainless steel, a Silcosteel® layer is stable to 600 °C. Parts treated with a secondary polymeric layer are limited to temperatures of 400 °C in inert atmospheres and 250 °C when oxygen is present, the temperature maximums for the polymer. Temperatures above 600 °C can be used under certain conditions—please contact us for information.

6. Why use Sulfinert® or Silcosteel® treatment instead of Teflon® coating?
Three reasons: 1) Sulfinert® and Silcosteel® layers are nonpolymeric, so they do not exhibit the problems associated with gas permeability. 2) Teflon® coating often flakes off the surface, while the Sulfinert® or Silcosteel® layer is tightly integrated into the substrate lattice. 3) Teflon® coating is limited to 280 °C, while Silcosteel® treated stainless steel tubing and fittings can be used to 600 °C.

7. Why use Siltek®/Sulfinert® treated tubing for transfer lines?
Siltek®/Sulfinert® treated stainless steel tubing offers all of the advantages of glass or fused silica tubing for the transfer of active compounds (e.g., sulfurs), but is far more durable and flexible.

8. Is treated tubing similar to glass-lined tubing (GLT)?
No. Sulfinert® or Silcosteel® treated tubing is flexible and can be bent without heating. Also, the Sulfinert® or Silcosteel® layer is highly inert, unlike impure glass.

9. How can I clean the surface of a treated part after use?
Most often, a mild organic solvent (methylene chloride, methanol, hexane) or water is sufficient. Mild sonication may assist and accelerate the process. Do not use caustic, abrasive, or high pH (pH>8) cleaners, as they will damage or dissolve the layer. Steam cleaning in the presence of oxygen or air could create surface activity, and also should be avoided.

10. What materials should I avoid using with Silcosteel® treated parts?
The Silcosteel® coating is silicon-based and is prone to attack by hydrofluoric acid or by basic compounds. The surface should not be exposed to media with pH>8.

11. Siltek® and Sulfinert®: What's the Difference?
Siltek® is the name for the patented deposition process. When the Siltek® process was developed, the application that showed the greatest benefit was the storage and transfer of low ppb level active sulfur compounds, such as hydrogen sulfide and mercaptans. Because there was (and continues to be) demand for a reliable surface treatment for this application, the name Sulfinert® is used to describe Siltek® treated products created specifically for this purpose.

Instrument-Grade Welded and Drawn 304 Grade Stainless Steel Tubing

Clean tubing is critical to ensure the delivery of pure gas to your instrument. Restek's stainless steel tubing is cleaned specifically for inertness using the procedure for processing Silcosteel® and Siltek®-treated products, because scrupulously clean parts are a prerequisite for a quality coating. This ensures you are getting quality tubing for your chromatography system.

Tubing Dimensions		Length (per-foot pricing on 26 feet or more) 25 Feet		26–100 Feet		>100 Feet*	
ID (in.)	OD (in.)	cat.#	price	cat.#	price	cat.#	price
0.01"	1/16"	21500	$67	21501		21502	
0.02"	1/16"	21503	$67	21504		21505	
0.03"	1/16"	21506	$67	21507		21508	
0.04"	1/16"	21509	$67	21510		21511	
0.085"	1/8"	21512	$60	21513		21514	
0.21"	1/4"	21515	$72.50	21516		21517	

*The availability of long lengths (continuous lengths up to 500 feet) is subject to inventory constraints. Please inquire before ordering.

ordering **note**

Required length in meters x 3.2808 = length in feet.

An extra charge is applied for cutting and/or straightening stainless steel and/or copper tubing, calculated from the total number of pieces produced for each line item:

# of Pieces	Added Charge
5 to 15	0
16 to 30	
31 to 75	
76 to 99	
100 to 200	

Precleaned Copper Tubing

- Adheres to ASTM B-280.
- Precleaned and ready to use.
- Use for plumbing GC systems.

ID	OD	Wall	qty.	cat.#	price
0.065"	1/8"	0.030"	50 ft.	21590	
0.190"	1/4"	0.030"	50 ft.	21592	

tech tip

Plumbing a GC

It is essential to use clean chromatographic-grade tubing to plumb a GC. Standard-grade tubing contains residual hydrocarbon contaminants from the drawing process. These contaminants migrate into the carrier gas stream, elevating background noise and causing down time.

frequently **asked** question

Which treated tubing should I use?

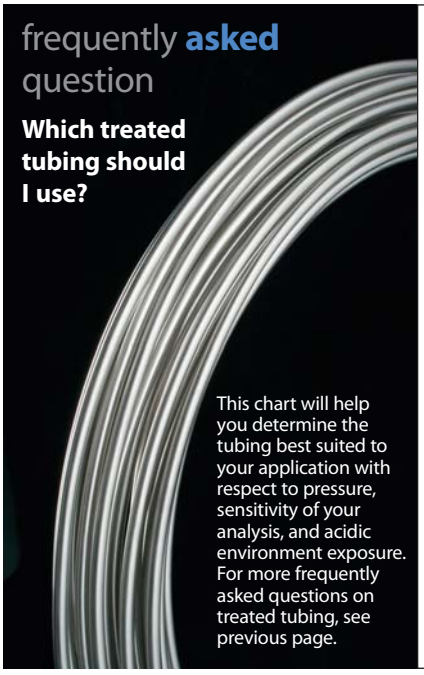

This chart will help you determine the tubing best suited to your application with respect to pressure, sensitivity of your analysis, and acidic environment exposure. For more frequently asked questions on treated tubing, see previous page.

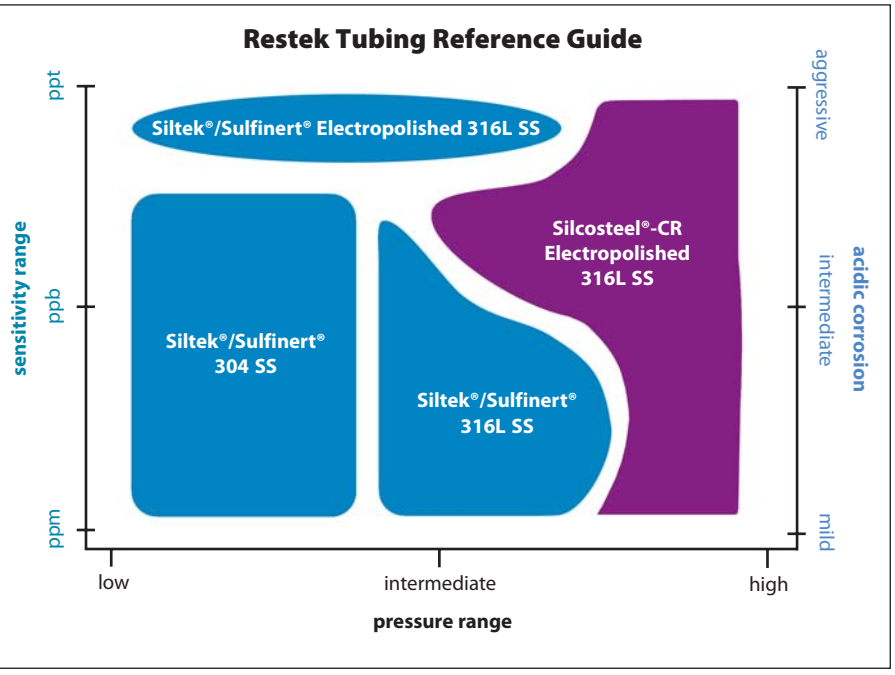

did you **know**?

A smoother internal surface is less adsorptive.

Top: electropolished finish, surface roughness average number: 10-15.

Bottom: conventional finish, surface roughness average number: approx. 23-27.

An extra charge is applied for cutting Siltek®/Sulfinert® or Silcosteel®-CR tubing. The charge is calculated from the total number of pieces produced for each line item:

# of Pieces	Added Charge
5 to 15	$50
16 to 30	$100
31 to 75	$150
76 to 99	$200
100 to 200	$250

Minimum Bend Radius for Coated Tubing

OD	Min. Bend Radius
≤1/16"	1" (2.5 cm)
1/8"	2" (5.1 cm)
1/4"	4" (10.2 cm)
3/8"	6" (15.2 cm)

did you **know**?

Other lengths and diameters of treated tubing are available on a custom basis.

Call for availability of lengths greater than 1,000 ft.

ordering **note**

Required length in meters x 3.2808 = length in feet.

Treated Seamless Electropolished 316L Grade Stainless Steel Tubing

Our highest performing tubing. Recommended for:

- demanding/corrosive environments.
- high temperatures.
- ultimate inertness.

Siltek®/Sulfinert Treated (Coiled)

OD	ID	Wall Thickness	cat.#	Price-per-foot 5-24 ft.	25-99 ft.	100-299 ft.	>300 ft.
1/8" (3.18mm)	0.085" (2.16mm)	0.020"	22538				
1/4" (6.35mm)	0.180" (4.57mm)	0.035"	22539				

Silcosteel®-CR Treated (Coiled)

OD	ID	Wall Thickness	cat.#	Price-per-foot 5-24 ft.	25-99 ft.	100-299 ft.	>300 ft.
1/8" (3.18mm)	0.085" (2.16mm)	0.020"	22536				
1/4" (6.35mm)	0.180" (4.57mm)	0.035"	22537				

1/8" OD: 5 ft. to 95 ft. in one continuous coil; 1/4" OD: 5 ft. to 300 ft. in one continuous coil. Longer lengths will be more than one coil.

Treated Welded/Drawn 304 Grade Stainless Steel Tubing

Our most popular grade of tubing. Recommended for:

- chromatography applications.
- gas delivery systems.
- lower pressures.
- inert applications.

Siltek®/Sulfinert® Treated (Coiled)

OD	ID	Wall Thickness	cat.#	Price-per-foot 5-24 ft.	25-199 ft.	200-399 ft.	>400 ft.
0.022" (0.56mm)	0.011" (0.28mm)		22500				
0.029" (0.74mm)	0.021" (0.53mm)		22501				
1/16" (1.59mm)	0.010" (0.25mm)		22502				
1/16" (1.59mm)	0.020" (0.51mm)		22503				
1/16" (1.59mm)	0.030" (0.76mm)		22504				
1/16" (1.59mm)	0.040" (1.02mm)		22505				
1/8" (3.18mm)	0.085" (2.16mm)	0.020"	22506				
1/4" (6.35mm)	0.210" (5.33mm)	0.020"	22507				

Treated Seamless 316L Grade Stainless Steel Tubing

High durability tubing. Recommended for:

- inert applications.
- high temperatures.
- high pressures.
- corrosive environments.
- zero bleed.

Siltek®/Sulfinert® Treated (Coiled)

OD	ID	Wall Thickness	cat.#	Price-per-foot 5-24 ft.	25-199 ft.	200-399 ft.	>400 ft.
1/8" (3.18mm)	0.055" (1.40mm)	0.035"	22508				
1/4" (6.35mm)	0.180" (4.57mm)	0.035"	22509				
3/8" (9.52mm)	0.277" (7.04mm)	0.049"	22914				

Silcosteel®-CR Treated (Coiled)

OD	ID	Wall Thickness	cat.#	Price-per-foot 5-24 ft.	25-199 ft.	200-399 ft.	>400 ft.
1/8" (3.18mm)	0.055" (1.40mm)	0.035"	22896				
1/4" (6.35mm)	0.180" (4.57mm)	0.035"	22897				
3/8" (9.52mm)	0.277" (7.04mm)	0.049"	22915				

Treated Straight, 6-Foot Length Stainless Steel Tubing

Individual 6-foot (± 1/2") straight pieces.

In response to customer requests, we offer 6-foot straight lengths of 1/8-, 1/4, and 3/8-inch treated tubing. This tubing can be cut to your exact requirements using a standard tubing cutter.

Siltek®/Sulfinert® Treated, 316L Grade

OD	ID	Wall Thickness	qty.	cat.#	price
1/8" (3.18mm)	0.055" (1.40mm)	0.035"	ea.	22901	
1/4" (6.35mm)	0.180" (4.57mm)	0.035"	ea.	22902	
3/8" (9.52mm)	0.277" (7.04mm)	0.049"	ea.	22903	

Silcosteel®-CR Treated, 316L Grade

OD	ID	Wall Thickness	qty.	cat.#	price
1/8" (3.18mm)	0.055" (1.40mm)	0.035"	ea.	22898	
1/4" (6.35mm)	0.180" (4.57mm)	0.035"	ea.	22899	
3/8" (9.52mm)	0.277" (7.04mm)	0.049"	ea.	22900	

Siltek®/Sulfinert® treated tubing is recommended for purge & trap and headspace systems

Treated Hydroguard® Deactivated Stainless Steel Tubing

Hydroguard® deactivation creates a high-density surface that is not readily attacked by aggressive hydrolysis.

Silcosteel® Treated, 304 Grade

OD	ID	Wall Thickness	cat.#	Price-per-foot 5-24 ft.	25-199 ft.	200-399 ft.	>400 ft.
1/16" (1.59mm)	0.010" (0.25mm)		22497				
1/16" (1.59mm)	0.020" (0.51mm)		22496				
1/16" (1.59mm)	0.030" (0.76mm)		22495				
1/16" (1.59mm)	0.040" (1.02mm)		22494				
1/8" (3.18mm)	0.085" (2.16mm)	0.020"	22493				
1/4" (6.35mm)	0.210" (5.33mm)	0.020"	22492				

Silcosteel® Treated, Seamless 316L Grade

OD	ID	Wall Thickness	cat.#	Price-per-foot 5-24 ft.	25-199 ft.	200-399 ft.	>400 ft.
1/8" (3.18mm)	0.055" (1.40mm)	0.035"	22491				
1/4" (6.35mm)	0.180" (4.57mm)	0.035"	22490				

Silcosteel® Treated, Electropolished 316L Grade

OD	ID	Wall Thickness	cat.#	Price-per-foot 5-24 ft.	25-99 ft.	100-299 ft.	>300 ft.
1/8" (3.18mm)	0.085" (2.16mm)	0.020"	22489				
1/4" (6.35mm)	0.180" (4.57mm)	0.035"	22488				

An extra charge is applied for cutting Siltek®/Sulfinert®, Silcosteel®, or Silcosteel®-CR tubing. The charge is calculated from the total number of pieces produced for each line item:

# of Pieces	Added Charge
5 to 15	
16 to 30	
31 to 75	
76 to 99	
100 to 200	

Gas Valves, VCO Fittings

Shut-Off Gas Valves
Swagelok®


Toggle valve


Ball valve


Plug valve

Valve Type	1/8" Brass cat.#	ea.	1/4" Brass cat.#	ea.	1/8" Stainless Steel cat.#	ea.	1/4" Stainless Steel cat.#	ea.
Toggle	23142		23143		23198		23199	
Ball	23144		23145		23200		23201	
Plug	23146		23147		23202		23203	

Metering Gas Valves
Swagelok®


23206


23148

Description	qty.	cat.#	price
1/8" Brass Metering Valve, straight	ea.	23148	
1/4" Brass Metering Valve, straight	ea.	23149	
1/8" Stainless Steel Metering Valve, straight	ea.	23204	$240
1/4" Stainless Steel Metering Valve, straight	ea.	23205	
Vernier Knob for Metering Valve	ea.	23206	$40

Shut-Off Gas Valves
Parker Balston®


Toggle valve


Ball valve


Plug valve

Valve Type	1/8" Brass cat.#	ea.	1/4" Brass cat.#	ea.	1/8" Stainless Steel cat.#	ea.	1/4" Stainless Steel cat.#	ea.
Toggle	22188		22189		22190		22191	
Ball	22192		22193		22194		22195	
Plug	22196	$61	22197		22198		22199	

Parker Balston ball and plug valves are also available treated. See **page 317**.

Metering Gas Valves
Parker Balston®


22209


22200

Description	qty.	cat.#	price
1/8" Nickel-Plated Brass Metering, straight	ea.	22200	
1/4" Nickel-Plated Brass Metering, straight	ea.	22201	
1/8" Stainless Steel Metering, straight	ea.	22204	
1/4" Stainless Steel Metering, straight	ea.	22205	
Vernier Knob for Metering Valve	ea.	22209	


23207


23209


23214


23212


23213


23210


23211


23215

VCO® O-Ring Face Seal Fittings
Swagelok®

NEW!

- Unique design allows easy installation where space is limited.
- Assemblies can be used from high pressure to critical vacuum, across a wide range of temperatures.
- Smooth finish on gland face ensures positive seal.
- Sealing is accomplished with a captive O-ring in the body component.

Swagelok® VCO® O-ring face seal fittings are designed for rapid assembly in pipe, tube, and welded systems.

Specifications:

Pressure Ratings	Up to 15,400 psig (1061 bar)
Temperature Ratings	Up to 400 °F (204 °C)

Description	Material	qty.	cat.#	price
1/4" VCO to 1/4" Tube Adaptor	Stainless Steel	2-pk.	23207	
1/4" VCO to 1/4" Tube Adaptor	Siltek Treated	2-pk.	23209	
1/4" VCO to 1/4" Tube Fitting	Stainless Steel	2-pk.	23210	
1/4" VCO to 1/4" Tube Fitting	Siltek Treated	ea.	23211	
1/4" VCO to 1/8" Tube Fitting	Stainless Steel	2-pk.	23215	
1/4" VCO to 1/8" Tube Fitting	Siltek Treated	ea.	23216	
1/4" VCO Nut	Stainless Steel	2-pk.	23212	
1/4" VCO Nut Blind	Stainless Steel	2-pk.	23213	
1/4" VCO Body Blind	Stainless Steel	2-pk.	23214	
Replacement O-Ring, 70 Durometer Fluorocarbon FKM, VCO 1/4", Size 010		10-pk.	23208	

Gap inspection gauge available on **page 325**.


21325

GC Installation Kit

This kit contains the tubing and fittings needed to add an additional GC to your lab bench. Kit includes: tubing cutter, one 1/8-inch x 1/4-inch reamer, one 1/4-inch x 1/8-inch brass tube end reducer, one 7/16-inch wrench, one 1/2-inch wrench, four 1/8-inch brass tees, ten 1/8-inch brass nuts, ten brass front and back ferrules, and 50 feet (15.2 meters) of our instrument-grade cleaned 1/8-inch copper tubing.

Description	qty.	cat.#	price
GC Installation Kit	kit	21325	

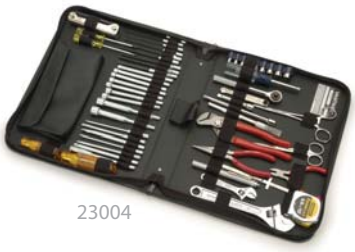
23004

54-Piece Tool Kit

Set comes with screwdrivers, pliers, wrenches, sockets, scissors, clamps, and more. Durable, zippered, notebook-style carrying case for easy transport.

Description	qty.	cat.#	price
Tool Kit	kit	23004	

Plier Set

Includes 6-inch nose/side cutter, 6-inch wire cutter, and 6-inch adjusting pliers.

Description	qty.	cat.#	price
Plier Set	set	23033	


22999

Metric 9 Piece Ball-Point Hex Key Set

Includes 9 metric hex keys (Allen wrenches): 1.5, 2, 2.5, 3, 4, 5, 6, 8, 10 mm.

Description	qty.	cat.#	price
Metric 9 Piece Ball-Point Hex Key Set	set	22999	


22998

12 Piece Ball-Point Hex Key Set

Includes 12 hex keys (Allen wrenches): 0.050", 1/16", 5/64", 3/32", 7/64", 1/8", 9/64", 5/32", 3/16", 7/32", 1/4", and 5/16".

Description	qty.	cat.#	price
12 Piece Ball-Point Hex Key Set	set	22998	

Torx® Screwdriver Set

- Set includes TR-10, TR-15, and TR-20.
- Ideal for performing routine maintenance on Agilent 6890 and 7890 GCs.

Description	qty.	cat.#	price
Torx Screwdriver Set	set	23034	

23002

5-in-1 Magnetic Screwdriver

Magnetic power tip holds bits and screws securely.

Description	qty.	cat.#	price
5-in-1 Magnetic Screwdriver	set	23002	


23001

Wrench Set

Includes 4-inch, 6-inch, and 8-inch adjustable wrenches.

Description	qty.	cat.#	price
Wrench Set	set	23001	

Tubing Tools

20192

1/16-Inch Tubing Cutter

- Produces square, smooth cuts in 1/16-inch tubing.
- Eliminates tubing distortion.
- Replaceable cutting wheel.

Description	qty.	cat.#	price
1/16" Tubing Cutter	ea.	20192	
Replacement Cutting Wheels	3-pk.	20185	

Ridgid® Tubing Cutter

- Excellent for cutting 1/8- or 1/4-inch metal tubing.*
- Compact size is ideal for tight spaces.
- Replaceable cutting wheel.

Description	qty.	cat.#	price
Ridgid Tubing Cutter for 1/8" or 1/4" metal tubing	ea.	23011	
Replacement Cutting Wheels	2-pk.	23012	

*Not for use with stainless steel tubing.

22621

Ridgid® Heavy-Duty Tubing Cutter

- Specifically designed to cut 3/16-1 1/8" stainless steel tubing.
- Large knob and 6 individual bearings for more control with less turning.
- Convenient fold-away reamer.

Description	qty.	cat.#	price
Ridgid Heavy-Duty Tubing Cutter	ea.	22621	

20193

1/16-Inch Tubing Cutting Pliers

- Ideal for cutting 1/16-inch tubing.
- Cuts quickly, reducing distortion.
- Cuts clean, eliminating need for deburring.

Description	qty.	cat.#	price
1/16" Tubing Cutting Pliers	ea.	20193	

23029

Dimensions: 8" x 6 1/4" x 4 1/4"
(20.3 x 15.9 x 10.8 cm)
Weight: 11 lbs. (5.0 kg)

SSI TC-20 Tube Cutting Machine

- Cuts 1/16", 1/8", or 1/4" tubing with inside diameter as small as 0.008".
- Electrically operated bench-top model.
- Handy dressing tool on the swing arm removes burrs and reams tubing.
- Voltage selectable 110–120/220–240 volts, 50–60 Hz.*

Description	qty.	cat.#	price
SSI Tubing Cutter Machine	ea.	23029	
SSI Replacement Cutting Wheels	3-pk.	23030	

*Unit shipped set for 110–120 operating voltage. Switch to 220–240 volts by using alternate fuse and power cord (included).

Restek Tubing Scorer

for MXT® Columns

- Makes perfect cuts every time.
- Easy to use.
- Leaves column entrance perfectly round.

Metal MXT® columns are easy to cut. Scoring wafers can be used, but may leave the column end irregularly shaped. The Restek tubing scorer is designed to make a perfect cut every time, leaving the column entrance perfectly round.

Enlarged view—score mark flush with guide face.

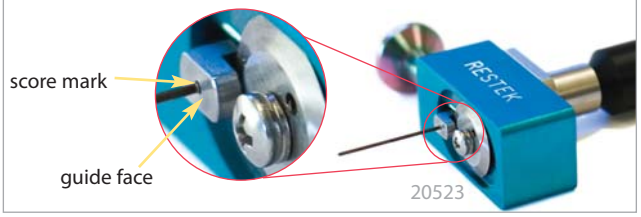

20523

Description	qty.	cat.#	price
Restek Tubing Scorer for MXT Columns (0.25-0.53mm ID & 0.5-0.8mm OD)	ea.	20523	
Replacement Scoring Wheel	ea.	20522	

20188

Tubing Burring & Reaming Tool

Removes burrs and reams tubing.

Description	Size	qty.	cat.#	price
Tubing Dressing Tool	1/16"	ea.	20188	
Replacement Insert	for 1/16" Tubing Dressing Tool	ea.	20189	
Tubing Dressing Tool	1/8"	ea.	20190	
Replacement Insert	for 1/8" Tubing Dressing Tool	ea.	20191	

20134

Tubing Reamer

- Removes burrs from stainless steel tubing.
- For 1/4- or 1/8-inch tubing.
- Nonslip safety design.

Description	qty.	cat.#	price
Tubing Reamer	ea.	20134	

23009

Tubing Bender

- Bends 1/8-inch, 3/16-inch, or 1/4-inch tubing.
- Assists in making accurate left-hand, right-hand, or offset bends.

Description	qty.	cat.#	price
Tubing Bender	ea.	23009	

ResTape Teflon® Tape

- For threaded connections in a wide range of plumbing materials.
- Each roll is 1/2" x 260".
- Maximum temperature: 260 °C.

Description	Color	Uses	qty.	cat.#	price
ResTape	Green PTFE	oxygen service*	ea.	22485	
ResTape	Yellow PTFE	general gas service**	ea.	22486	
ResTape	Grey PTFE	stainless steel fittings***	ea.	22487	

*Compatible with gaseous or liquid oxygen, and with many other gases and liquids.
**Compatible with a broad range of gases and liquids.
***Anti-galling. Also compatible with many other metals and polymers.

22627

Flexible Inspection Light

- Inspect inside surfaces of sample cylinders or other chambers.
- 14" reach.
- 100,000-hour LED life.

Description	qty.	cat.#	price
Flexible Inspection Light	ea.	22627	

22622

Swaging Tool

- Preswage compression fittings for easy installation.
- Ideal for installations in tight areas.
- For Swagelok® fittings only.

Description	qty.	cat.#	price
Swaging Tool	ea.	22622	

22623

Tee Wrench

- Hold 1/4" or 6 mm tee or cross fittings secure in multiple orientations during installation.
- Fits easily in tool box, pouch, or belt.
- Cushioned vinyl grip with generous gripping area.
- For Swagelok® fittings only.

Description	qty.	cat.#	price
Tee Wrench	ea.	22623	

22624

Gap Inspection Gauge

- Confirm that fittings are sufficiently tightened.
- For use with 1/4", 3/8", 1/2" Swagelok® fittings.
- For Swagelok® fittings in new installations only.

Description	qty.	cat.#	price
Gap Inspection Gauge	ea.	22624	

QL series Hydrogen Generators convert distilled deionized water into hydrogen gas through world's leading proton exchange membrane technology (PEM). The hydrogen generator generates pure hydrogen directly with electrolytic separation of pure water (deionized water) by a PEM cell. There is no need for an alkali solution to use.

QL Hydrogen Generators--Conventional Models

QL-150/300/500
(CE Certification)

Model	QL-150	QL-300	QL-500
H2 Outflow(ml/min)	0-150	0-310	0-510
H2 Pressure(MPa)	0.02-0.4 (under regular pressure)		
H2 Purity(%)	>99.999		
Power Consumption(W)	<90	<150	<200
Voltage(V)	AC 220 110 50-60Hz		
Dimension (L*W*H mm*mm*mm)	420*227*352		
Water Requirement	Pure water resistivity≥1MΩ/cm		
Weight(KG)	<15		

QL series Hydrogen Generators convert distilled deionized water into hydrogen gas through world's leading proton exchange membrane technology (PEM). The hydrogen generator generates pure hydrogen directly with electrolytic separation of pure water (deionized water) by a PEM cell. There is no need for an alkali solution to use.

QL Hydrogen Generators--High Purity Models

QL-150A/300A/500A
(CE Certification)

Model	QL-150A	QL-300A	QL-500A
H2 Outflow(ml/min)	0-150	0-310	0-510
H2 Pressure(MPa)	0.02-0.4 (under regular pressure)		
H2 Purity(%)	>99.9999		
Power Consumption(W)	<90	<150	<200
Voltage(V)	AC 220 110 50-60Hz		
Dimension (L*W*H mm*mm*mm)	420*227*352		
Water Requirement	Pure water resistivity≥1MΩ/cm		
Weight(KG)	<15		

QL series Hydrogen Generators convert distilled deionized water into hydrogen gas through world's leading proton exchange membrane technology (PEM). The hydrogen generator generates pure hydrogen directly with electrolytic separation of pure water (deionized water) by a PEM cell. There is no need for an alkali solution to use.

QL Hydrogen Generators--High Purity&High Pressure Models

QL-150B/300B/500B
(CE Certification)

Model	QL-150B	QL-300B	QL-500B
H2 Outflow(ml/min)	0-150	0-310	0-510
H2 Pressure(MPa)	0.02-0.6(under regular pressure)		
H2 Purity(%)	>99.9999		
Power Consumption(W)	<90	<150	<200
Voltage(V)	AC 220 110 50-60Hz		
Dimension (L*W*H mm*mm*mm)	420*227*352		
Water Requirement	Pure water resistivity≥1MΩ/cm		
Weight(KG)	<15		

QL series Hydrogen Generators convert distilled deionized water into hydrogen gas through world's leading proton exchange membrane technology (PEM). The hydrogen generator generates pure hydrogen directly with electrolytic separation of pure water (deionized water) by a PEM cell. There is no need for an alkali solution to use.

QL Hydrogen Generators--Medium Models

QL-1000

QL-2000/3000

Model	QL-1000	QL-2000	QL-3000
H2 Outflow(ml/min)	0-1020	0-2020	0-3050
H2 Pressure(MPa)	0.02-0.4 (under regular pressure)		
H2 Purity(%)	>99.999		
Power Consumption(KW)	<0.5	<1	<1.5
Voltage(V)	AC 220 110 50-60Hz		
Dimension (L*W*H mm*mm*mm)	458*230*380	500*450*800	
Water Requirement	Pure water resistivity≥1MΩ/cm		
Weight(KG)	<20	<60	

QL series Hydrogen Generators convert distilled deionized water into hydrogen gas through world's leading proton exchange membrane technology (PEM). The hydrogen generator generates pure hydrogen directly with electrolytic separation of pure water (deionized water) by a PEM cell. There is no need for an alkali solution to use.

QL Hydrogen Generators--Large Models

QL-5000/10000

QL-17000/34000/17000HA/17000HB/
34000HA/34000HB

Model	QL-5000	QL-10000	QL-17000	QL-34000	QL-17000HA	QL-17000HB	QL-34000HA	QL-34000HB
H2 Outflow (L/min)	0-5	0-10	0-17	0-22	0-17	0-17	0-34	0-34
H2 Pressure (MPa)	0.02-0.4 (under regular pressure)				0.02-1	0.02-2	0.02-1	0.02-2
H2 Purity(%)	>99.999							
Power Consumption (KW)	<2	<4	<7.2	<14	<7.2		<14	
Voltage (V)	AC 220/380 50-60Hz		AC 380 50-60Hz					
Dimension (L*W*H mm*mm*mm)	1035*550*1100	1035*550*1500	1650*650*1900					
Water Requirement	Pure water resistivity≥1MΩ/cm							
Weight (KG)	<200	<450	<500	<650	<500		<650	

SHC series Hydrogen Generators convert distilled deionized water into hydrogen gas through traditional method--**adding electrolyte ALKALI**. This type of hydrogen generators is a ideal economi choice for customers.

QL Hydrogen Generators--Conventional Models

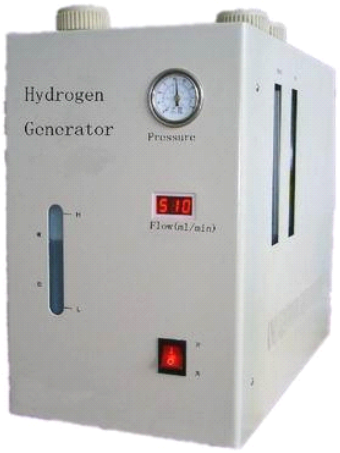

SHC-300/500

Model	SHC-300	SHC-500
H2 Outflow(ml/min)	0-300	0-500
H2 Pressure(MPa)	0--0.4	
H2 Purity(%)	>99.999	
Overpressure Protection(MPa)	0.45	
Voltage(V)	AC 220 110, 50-60Hz	
Power Consumption(W)	<150	<300
Dimension(mm)	420*227*350(L*W*H)	
Weight(KG)	<15	<17

QL series Oxy-hydrogen Generators convert distilled deionized water into oxygen and hydrogen gas through world's leading proton exchange membrane technology (PEM). The oxy-hydrogen generator generates pure oxygen and hydrogen directly with electrolytic separation of pure water (deionized water) by a PEM cell. There is no need for an alkali solution to use.

QL Hydrogen Oxygen Generators

Model	QL-150HO		QL-300HO		QL-500HO		QL-1000HO	
Outflow(ml/min)	H2: 0-150	O2: 0-75	H2: 0-300	O2: 0-150	H2: 0-510	O2: 0-255	H2: 0-1000	O2:0-500
Output Pressure(MPa)	H2: 0.02--0.4				O2: 0--0.2			
Purity(%)	H2: >99.999%				O2: >99%			
Power Consumption (W)	<90		<150		<200		<500	
Voltage(V)	AC 220 110 50-60Hz							
Water Requirement	Pure water resistivity≥1MΩ/cm							

QL-150HO/300HO /500HO/1000HO

QL Pure Air Generators (Air Pumps) adopt completely enclosed free-oil compressor to purify natural air and remove moisture, oil and impurities. Pure air is output through device. Total hydrocarbonis less than0.5ppm(methane).

QL Pure Air Generators(Air Pumps)

QL-3/5/10/20/40/50

Model	QL-3	QL-5	QL-10	QL-20	QL-40	QL-50
Outflwo(ml/min)	0-3	0-5	0-10	0-20	0-40	50-300
Output Pressure(MPa)	0-0.4					0.07
Power Consumption (W)	<160	<180	<200	<350	<380	<100
Voltage(V)	AC 220 50-60Hz					
Dimension (L*W*H, mm)	430*290*400		500*270 *420	400*310*640		480*310 *650
Weight (KG)	<26		<30	<34	<36	<50

QL Nitrogen Generators / QL Nitrogen&Air Generators generate pure nitrogen through PSA technology.

QL Nitrogen Generators / QL Nitrogen&Air Generators

QL-N300/N500/NA300

Name	N2 Generator		N2&Air Generator	
Model	QL-N300	QL-N500	QL-NA300	
Outflow(ml/min)	0-300	0-500	N2: 0-300	Air: 0-1000
Output Pressure(MPa)	0-0.4			
Purity(%)	99.99			Three-grade purification Water content 0.0204ppm Co2 content 0.039% Oil content 0.54ppm
Voltage(V)	AC 220 50-60Hz			
Environmental Requirement	Temperature 0--40℃ without dust and corrosion gas			
Power Consumption(W`)	<180		<200	
Weight(KG)	<35		50	
Dimension(mm)	460*290*760(L*W*H)			

QL Nitrogen&Hydrogen&Air Generators generate pure nitrogen through PSA and SPE/PEM technolog.

QL Nitrogen&Hydrogen&Air Generators

QL-NHA300

Model	QL-NHA300		
Name of Gas	N2	H2	Air
Outflow(ml/min)	0-300	0-300	0-1000
Output Pressure(MPa)	0-0.4		
Purity(%)	99.99	99.999	Three-grade purification Water content 0.0204ppm Co2 content 0.039% Oil content 0.54ppm
Power Consumption(W)	<350		
Voltage(V)	AC 220 50-60Hz		
Weight(KG)	55		
Dimension(mm)	460*440*460(L*W*H)		

QL Gas Purification is three-grade purification device. It can be used both in series and in parallel.

QL Gas Purification